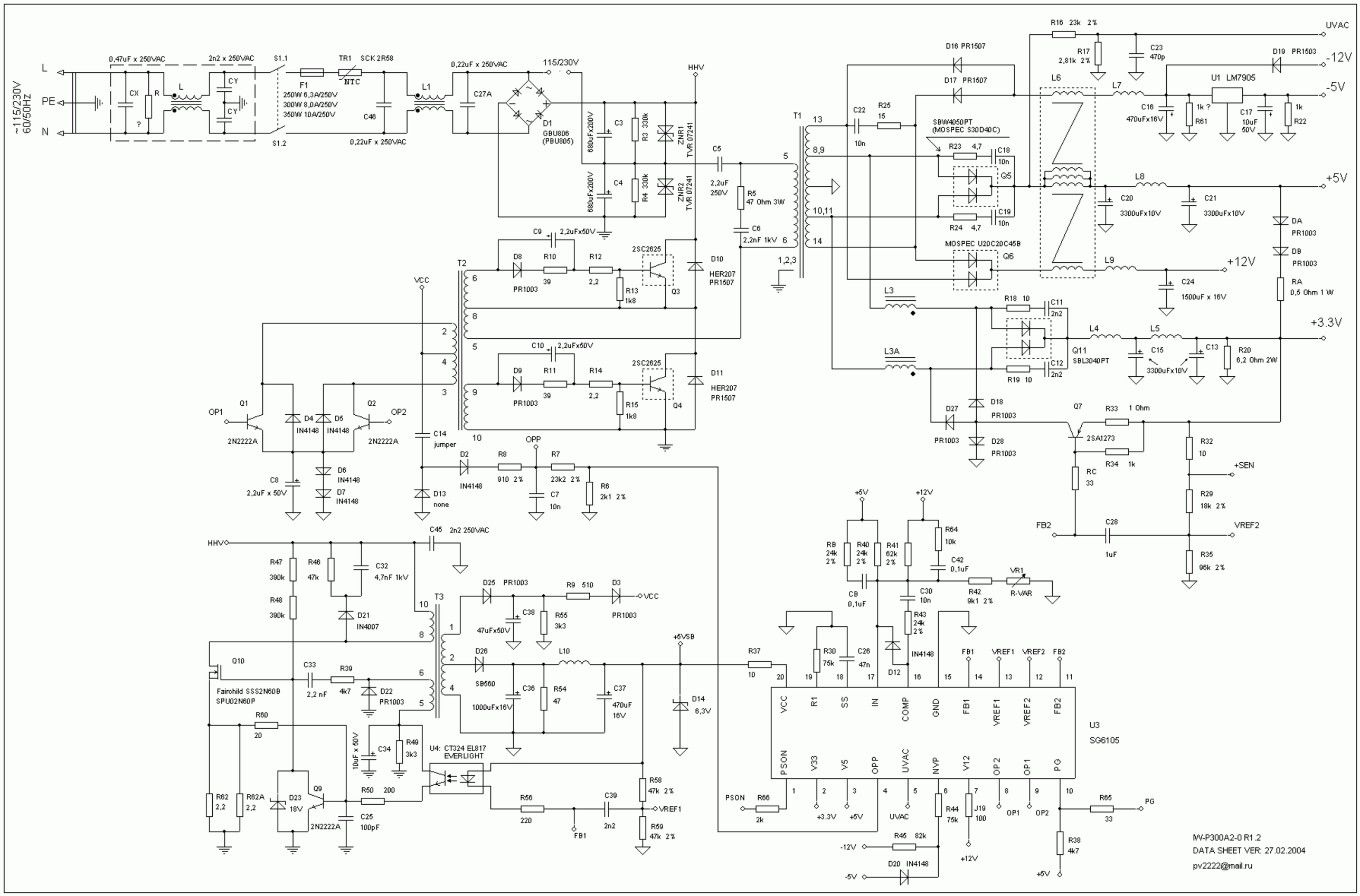
~115/230V 60/50Hz
L
PE
N
0,47uF x 250VAC
2n2 x 250VAC
CX
R
CY
S1.1
S1.2
F1
250W 6,3A/250V
300W 8,0A/250V
350W 10A/250V
TR1 SCK 2R58
NTC
C46
0,22uF x 250VAC
L1
C27A
115/230V
D1
GBU806
(PBU805)
HHV
680uFx200V
C3
C4
R3 330k
R4 330k
ZNR1
TVR 07241
ZNR2
TVR 07241
C5
2,2uF
250V
R5
47 Ohm 3W
C6
2,2nF 1kV
T1
C9 2,2uFx50V
C10 2,2uFx50V
D8
D9
PR1003
R10
R11
39
R12
R14
2,2
R13
R15
1k8
2SC2625
Q3
Q4
D10
D11
HER207
PR1507
T2
VCC
C14
jumper
OP1
OP2
Q1
Q2
2N2222A
D4
D5
IN4148
C8
2,2uF x 50V
D6
D7
D2
D13
none
R8
910 2%
R7
23k2 2%
C7
10n
R6
2k1 2%
OPP
C45 2n2 250VAC
R47
390k
R46
47k
C32
4,7nF 1kV
R48
390k
D21
IN4007
T3
D25 PR1003
R9 510
D3
VCC
C38
47uFx50V
R55
3k3
Q10
Fairchild SSS2N60B
SPU02N60P
C33
2,2 nF
R39
4k7
D22
PR1003
D26
SB560
L10
C36
1000uFx16V
R54
47
C37
470uF
16V
+5VSB
D14
6,3V
R60
20
10uF x 50V
C34
R49
3k3
U4: CT324 EL817
EVERLIGHT
R62
2,2
R62A
2,2
D23
18V
Q9
2N2222A
R50 200
C25
100pF
R56
220
C39
2n2
FB1
R58
47k 2%
R59
47k 2%
VREF1
R37
10
D16 PR1507
D17 PR1507
C22
10n
R25
15
SBW4050PT
(MOSPEC S30D40C)
R23 4,7
R24 4,7
C18
10n
C19
10n
Q5
MOSPEC U20C20C45B
Q6
L3
L3A
R16 23k 2%
R17
2,81k 2%
C23
470p
UVAC
D19 PR1503
-12V
-5V
L6
L7
U1 LM7905
C16
470uFx16V
1k ?
R61
C17
10uF
50V
1k
R22
L8
+5V
C20
3300uFx10V
C21
3300uFx10V
DA
PR1003
DB
PR1003
RA
0,5 Ohm 1 W
L9
+12V
C24
1500uF x 16V
R18 10
C11
2n2
R19 10
C12
2n2
Q11
SBL3040PT
L4
L5
C15
3300uFx10V
C13
R20
6,2 Ohm 2W
+3.3V
D27
PR1003
D18
PR1003
D28
PR1003
Q7
2SA1273
R33 1 Ohm
R34 1k
RC
33
R32
10
+SEN
R29
18k 2%
FB2
C28
1uF
VREF2
R35
96k 2%
+5V
+12V
RB
24k
2%
R40
24k
2%
R41
62k
2%
R64
10k
C42
0,1uF
CB
0,1uF
C30
10n
R42
9k1 2%
VR1
R-VAR
R43
24k
2%
IN4148
D12
R30
75k
C26
47n
U3
SG6105
VCC
R1
SS
IN
COMP
GND
FB1
VREF1
VREF2
FB2
PSON
V33
V5
OPP
UVAC
NVP
V12
OP2
OP1
PG
PSON
R66
2k
+3.3V
+5V
UVAC
R44
75k
J19
100
+12V
OP1
OP2
R65
33
PG
R38
4k7
+5V
R45 82k
-12V
D20 IN4148
-5V
IW-P300A2-0 R1.2
DATA SHEET VER: 27.02.2004
pv2222@mail.ru