PC board views

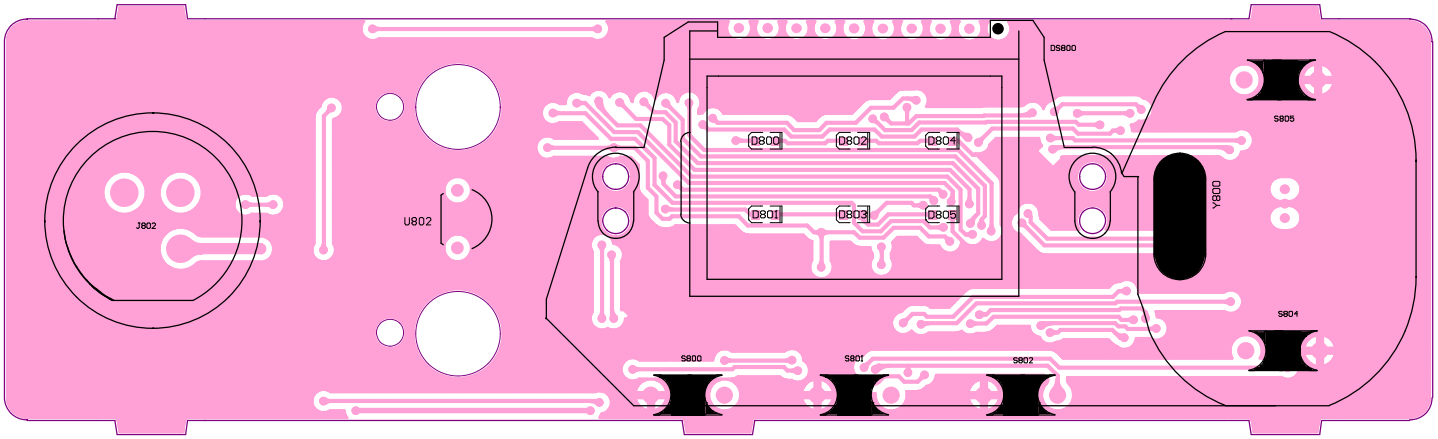

PC board views

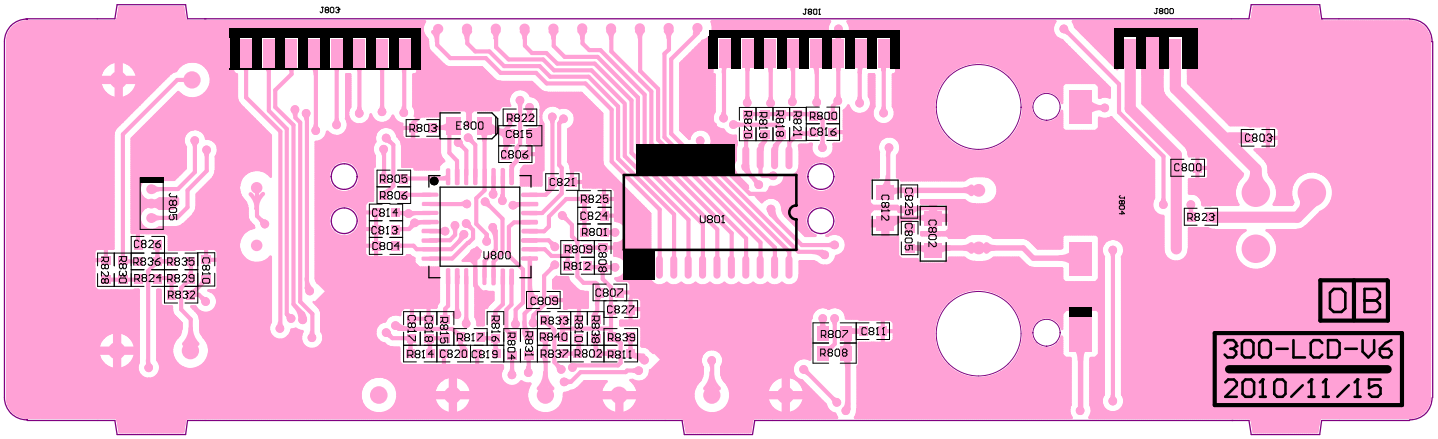

PC board views

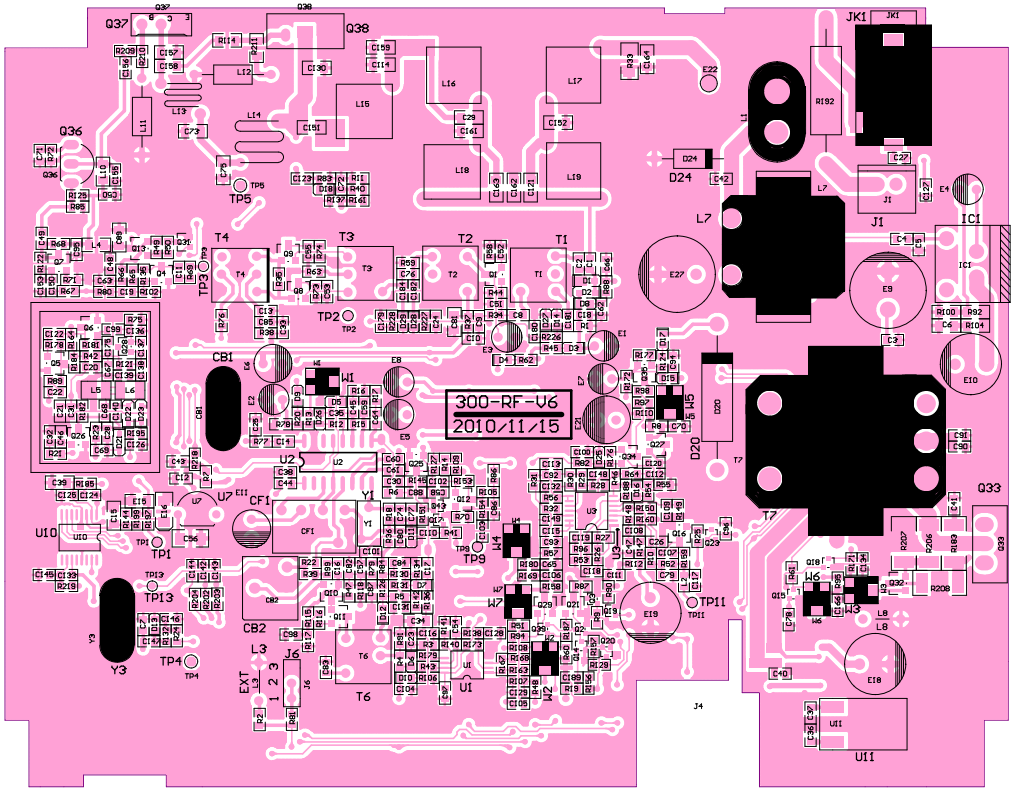
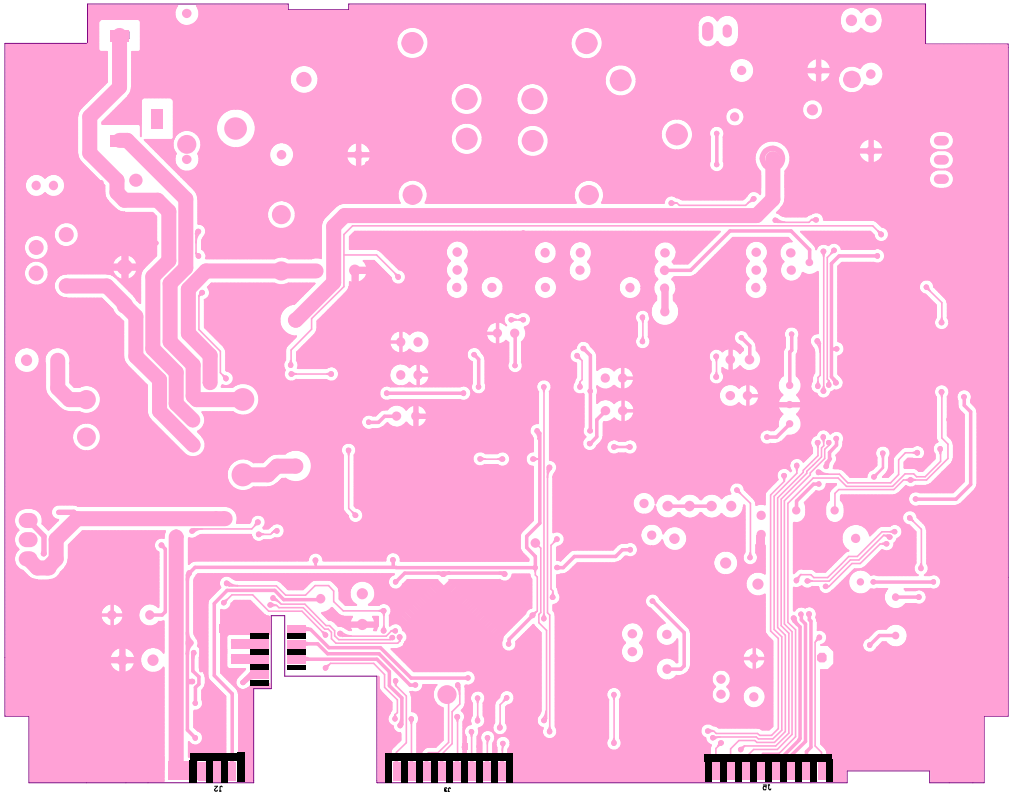
PC board views