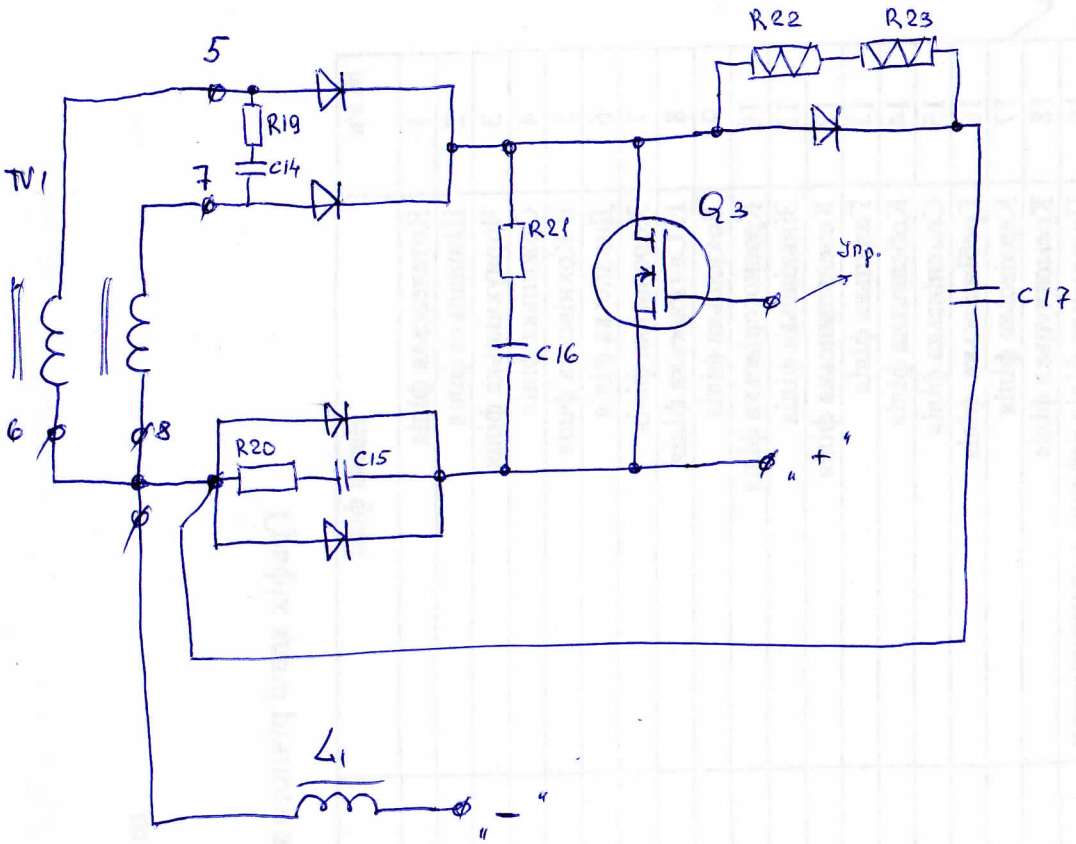

$R_{19} = 30\ \Omega$

$R_{20} = 220\ \Omega$

$R_{21} = 110\ \Omega$

R_{22}, R_{23} } 5W 4,7 Ω.

C14, C15, C16 } 472 = 4700 nф.

C17 = 2μ2M × 63V
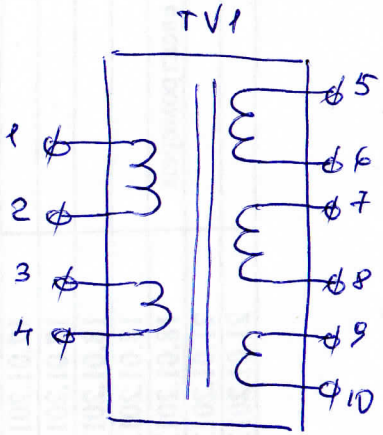
Q3 = P53NF06.