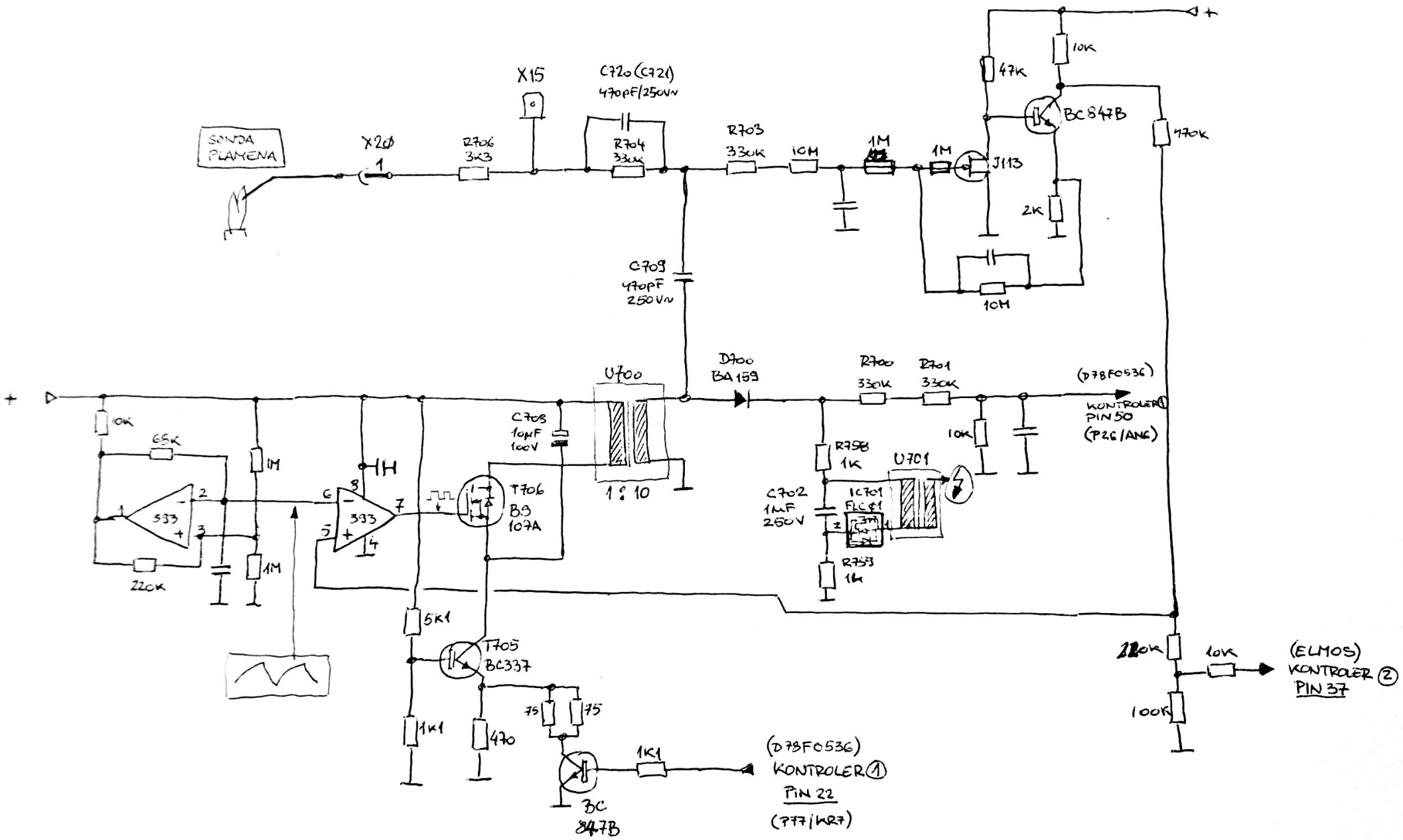
SONDA PLAMENA
X20
R706 3k3
X15
C720 (C721) 470pF/250VN
R704 330k
R703 330k
10M
1M
1M
J113
47k
10k
BC847B
470k
2k
10M
C709 470pF 250VN
U700
1 : 10
D700 BA159
R700 330k
R701 330k
(D78F0536)
KONTROLER 1
PIN 50
(P26/ANG)
10k
C708 10µF 100V
R758 1k
U701
C702 1µF 250V
IC701 FLC81
R759 1k
10k
65k
1M
1M
220k
533
333
T706 BS 107A
5k1
T705 BC337
1k1
470
75
75
BC 847B
1k1
(D78F0536)
KONTROLER 1
PIN 22
(P77/KR7)
220k
10k
100k
(ELMOS)
KONTROLER 2
PIN 37