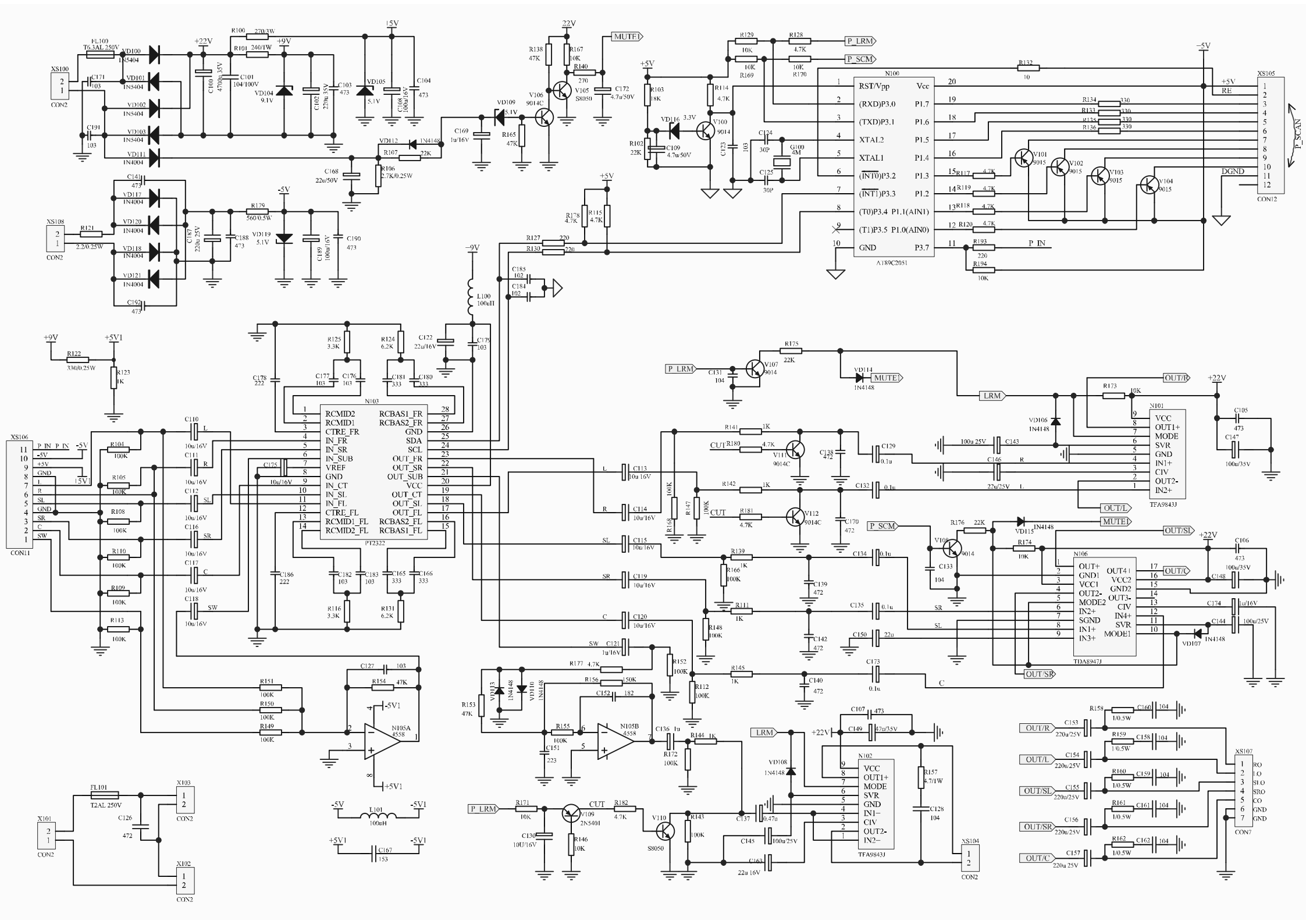
N100
RST/Vpp
(RXD)P3.0
(TXD)P3.1
XTAL2
XTAL1
(INT0)P3.2
(INT1)P3.3
(T0)P3.4 P1.1(AIN1)
(T1)P3.5 P1.0(AIN0)
GND
Vcc
P1.7
P1.6
P1.5
P1.4
P1.3
P1.2
P3.7
A189C2051
N103
RCMID2
RCMID1
CTRE_FR
IN_FR
IN_SR
IN_SUB
VREF
GND
IN_CT
IN_SL
IN_FL
CTRE_FL
RCMID1_FL
RCMID2_FL
RCBAS1_FR
RCBAS2_FR
GND
SDA
SCL
OUT_FR
OUT_SR
OUT_SUB
VCC
OUT_CT
OUT_SL
OUT_FL
RCBAS2_FL
RCBAS1_FL
PT2322
N101
VCC
OUT1+
MODE
SVR
GND
IN1+
CIV
OUT2-
IN2+
TFA9843J
N106
OUT+
GND1
VCC1
OUT2-
MODE2
IN2+
SGND
IN1+
IN3+
OUT4-
VCC2
GND2
OUT3-
CIV
IN4+
SVR
MODE1
TDA8947J
N102
VCC
OUT1+
MODE
SVR
GND
IN1-
CIV
OUT2-
IN2-
TFA9843J
N105A
4558
N105B
4558
XS100
CON2
XS105
CON12
XS106
CON11
XS107
CON7
XS104
CON2
X101
X102
X103
FL100
T6.3AL 250V
FL101
T2AL 250V
L100
100uH
L101
100uH
P_LRM
P_SCM
P_IN
P_SCAN
MUTE1
OUT/R
OUT/L
OUT/SL
OUT/SR
OUT/C
LRM
CUT
DGND