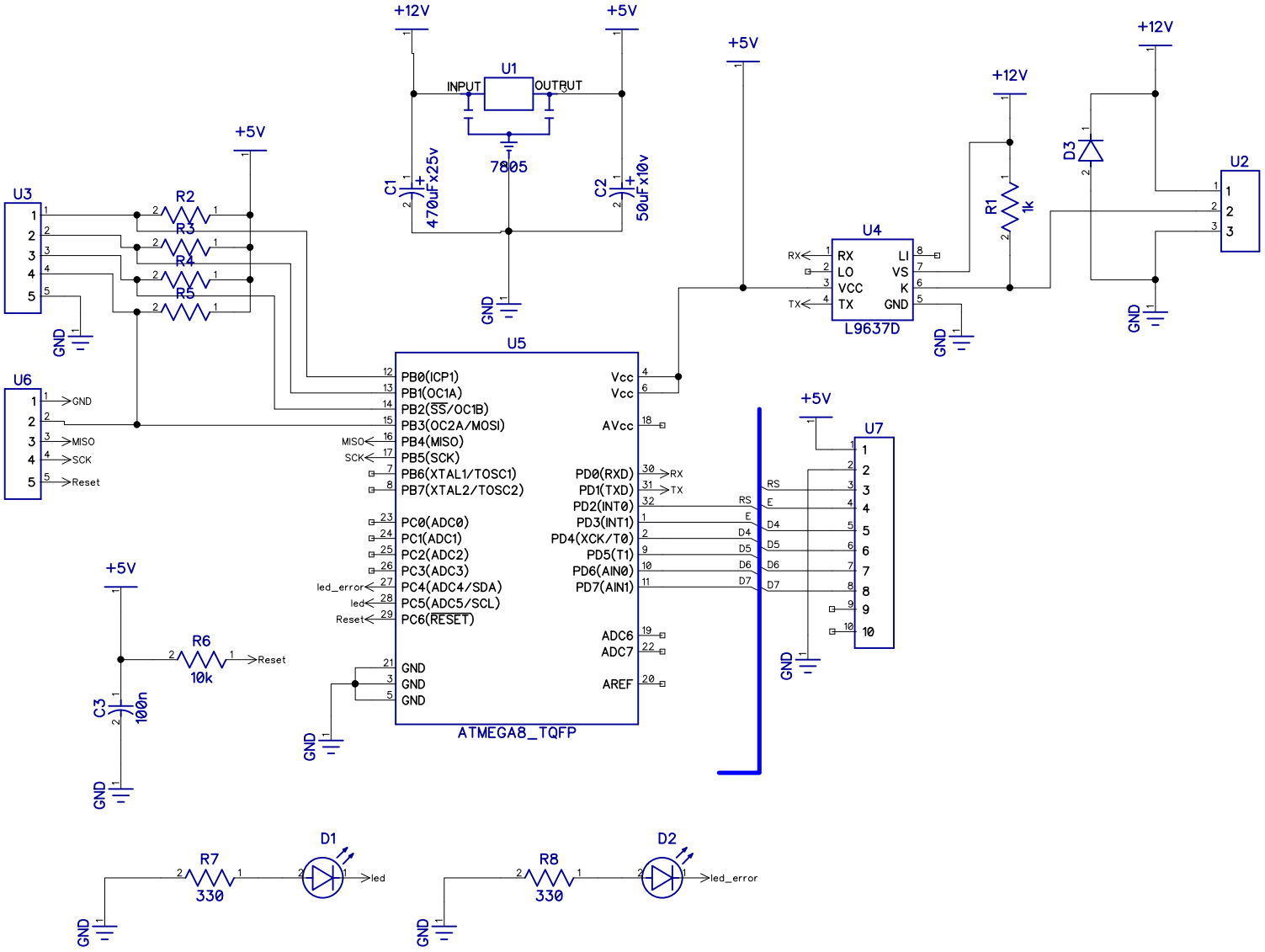
+12V
+5V
U1
INPUT
OUTPUT
7805
C1
470uFx25v
C2
50uFx10v
GND
U3
R2
R3
R4
R5
U6
GND
MISO
SCK
Reset
U5
PB0(ICP1)
PB1(OC1A)
PB2(SS/OC1B)
PB3(OC2A/MOSI)
PB4(MISO)
PB5(SCK)
PB6(XTAL1/TOSC1)
PB7(XTAL2/TOSC2)
PC0(ADC0)
PC1(ADC1)
PC2(ADC2)
PC3(ADC3)
PC4(ADC4/SDA)
PC5(ADC5/SCL)
PC6(RESET)
led_error
led
Vcc
AVcc
PD0(RXD)
PD1(TXD)
PD2(INT0)
PD3(INT1)
PD4(XCK/T0)
PD5(T1)
PD6(AIN0)
PD7(AIN1)
ADC6
ADC7
AREF
ATMEGA8_TQFP
U4
RX
LO
VCC
TX
LI
VS
K
L9637D
R1
1k
D3
U2
U7
RS
E
D4
D5
D6
D7
R6
10k
C3
100n
D1
R7
330
D2
R8
330