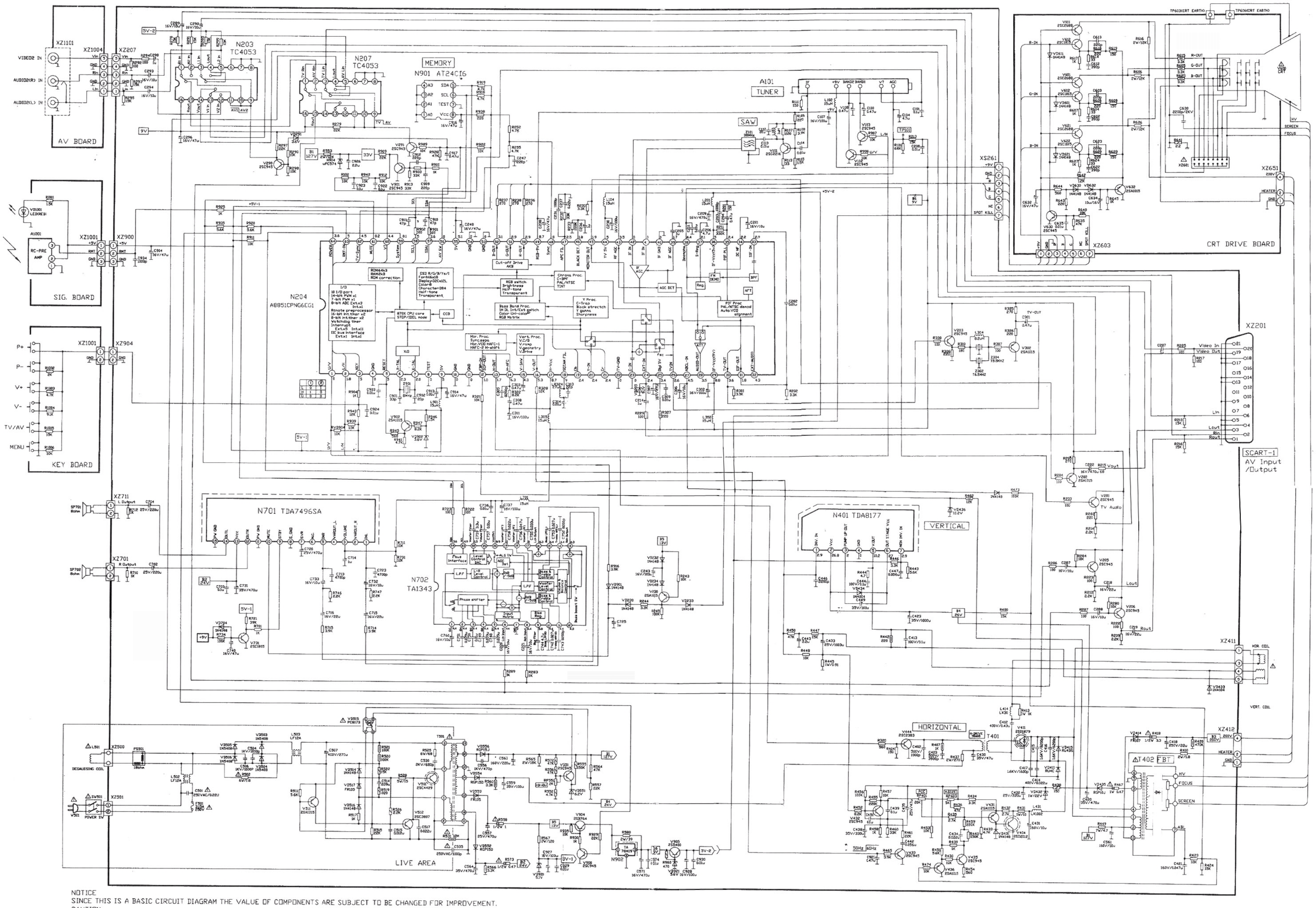

NOTICE
SINCE THIS IS A BASIC CIRCUIT DIAGRAM THE VALUE OF COMPONENTS ARE SUBJECT TO BE CHANGED FOR IMPROVEMENT.
CAUTION
THE COMPONENTS WITH '⚠' IN THE SCHEMATIC DIAGRAM WHICH HAVE SPECIAL CHARACTERISTICS IMPORTANT FOR SAFETY SHOUD BE REPLACED ONLY WITH TYPE IDENTICAAL TO THOSE IN THE OGIGIAL CIRCUIT.

ECSDD178AE