CUC 2130, 2130 M, 2131, 2131 M, 2136, 2136 M Schaltpläne und Platinenabbildungen / Circuit Diagrams and Layout of the PCBs

Teilschaltplan Ablenkung / Circuit Diagram Deflection Section

	*	+A	PFC	R53033	BR52006	R52006	IC50020	R50044	R50047	R50036	T53001	R53016	TR53020	R53041 R53042	R53056	L53074	BR54004	D54004	CR57118	R62501	OST-WEST	BR-PLATTE
55cm PHI RF	A51ERF135X70	140V	—	2,7/1W	—	0,22	STV9306A	2,0	2,2	100k	BU508AF	6,8/7W	-665,22	120k/2%	470k/2%	-871,16	X	—	3,9k	-016	-207,5300	-122,4100
63cm PHI BM	A59EAK071X01	152V	—	2,7/1W	—	0,22	STV9306	1,2	1,5	100k	BU508AF	6,8/7W	-665,02	120k/2%	390k/2%	-871,16	X	—	2,2k	-016	-207,5200	-122,4100
70cm PHI BM	A66EAK071X01	152V	—	2,7/1W	—	0,22	STV9306	1,2	1,3	100k	BU508AF	6,8/7W	-665,02	120k/2%	390k/2%	-871,16	X	—	2,2k	-016	-207,5100	-122,4100
72cm PHI SF	A68ESF002X11	142V	X	3,9/1W	X	—	STV9306A	1,2	1	100k	S2000N	6,8/11W	-665,03	82k/2%	270k/2%	-871,16	X	—	3,9k	-016	-207,5400	-122,4400
70cm TESLA	A66EMZ43X07	152V	X	2,71W	X	—	STV9306	1,2	1,5	100k	BU508AF	6,8/7W	-665,05	120k/2%	390k/2%	-871,16	X	—	3,3k	-018	-207,5900	-122,4100
63cm TESLA	A59EMZ53X06	152V	X	2,7/1W	—	0,22	STV9306	1,2	1,2	100k	BU508AF	6,8/7W	-665,02	120k/2%	390k/2%	-871,16	X	—	2,2k	-018	-207,5700	-122,4100
63cm TESLA	A59EMZ53X07	152V	X	2,7/1W	X	—	STV9306	1,2	1,2	100k	BU508AF	6,8/7W	-665,05	120k/2%	390k/2%	-871,16	X	—	3,3k	-018	-207,5900	-122,4100
70cm THOM	A66EHJ13X31	155V	X	1,2/2W	—	0,22	STV9306	1,2	1,5	100k	BU508AF	6,8/7W	-665,02	120k/2%	390k/2%	-871,16	X	—	2,2k	-018	-207,5500	-122,4100
70cm TESLA	A66EMZ43X06	152V	X	2,7/1W	—	0,22	STV9306A	1,2	1,5	100k	BU508AF	6,8/7W	-665,02	120k/2%	390k/2%	-871,16	X	—	3,9k	-018	-207,5800	-122,4100
72cm SAM RF	A68QCP893X530	135V	X	2,2/1W	X	—	STV9306A	1,2	1,5	220k	S2000N	6,8/11W	-665,04	82k/2%	270k/2%	-871,16	X	—	3,9k	-018	-207,5600	-122,4100

Spannungstabelle Table of Voltages	
+C	+200V
+D	+26V
+E	+8V
+F	+5V
+H	+5V
+M	+14V
+S	+13V

Bei den in den Schaltplänen angegebenen Messwerten handelt es sich um Näherungswerte!

The measured values given in the circuit diagrams are approximates!

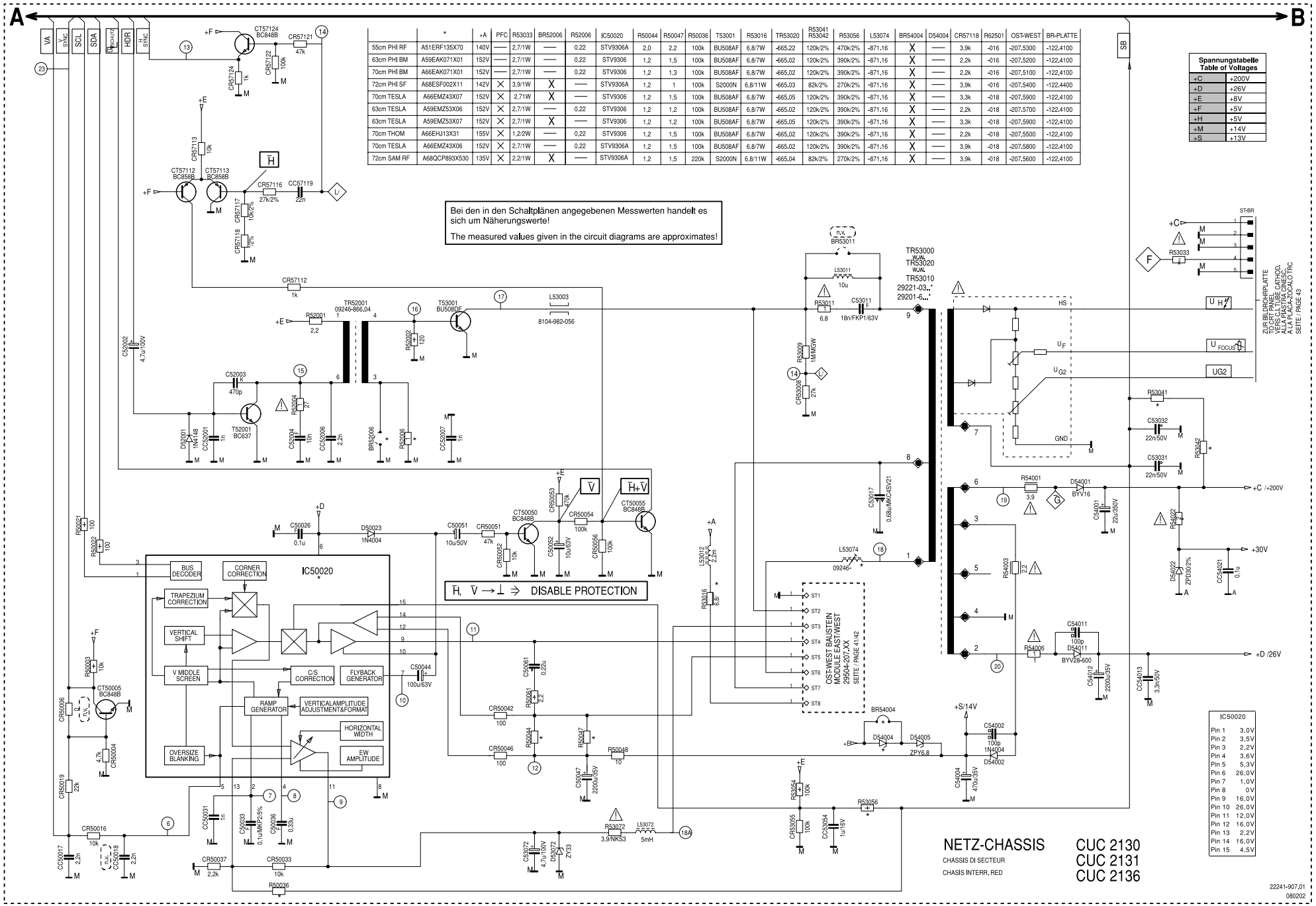

IC50020	
Pin 1	3,0V
Pin 2	3,5V
Pin 3	2,2V
Pin 4	3,6V
Pin 5	5,3V
Pin 6	26,0V
Pin 7	1,0V
Pin 8	0V
Pin 9	16,0V
Pin 10	26,0V
Pin 11	12,0V
Pin 12	16,0V
Pin 13	2,2V
Pin 14	16,0V
Pin 15	4,5V