REV #	DATE	REVISION
7	7/17/91	ECO #391 AND ECO #394 REPLACED R75 WITH D47 SO +12 IS NOT DRAGGED DOWN BY BATTERY SUPPLY WHILE C27 DISCHARGES RAPIDLY AT WHEN UNIT IS TURNED OFF. THIS PREVENTS UV LOCKOUT ON IC7, WHICH CAUSES IT TO PUT OUT DC.
8,9	8/30/91	ECO #412 AND ECO #413 Q10 BSS100'S HAD STATIC PROBLEMS ON ASSEMBLY LINE. Q10A BUZ71 IS USED INSTEAD.
10	9/6/91	ECO #415 ADDED C49=.01uF TO PREVENT IC7 "HICCUP" DUE TO NOISE ON +5 DURING RELAY SWITCHING.

NOTES:

1) ALL DIODES 1N4148 UNLESS MARKED

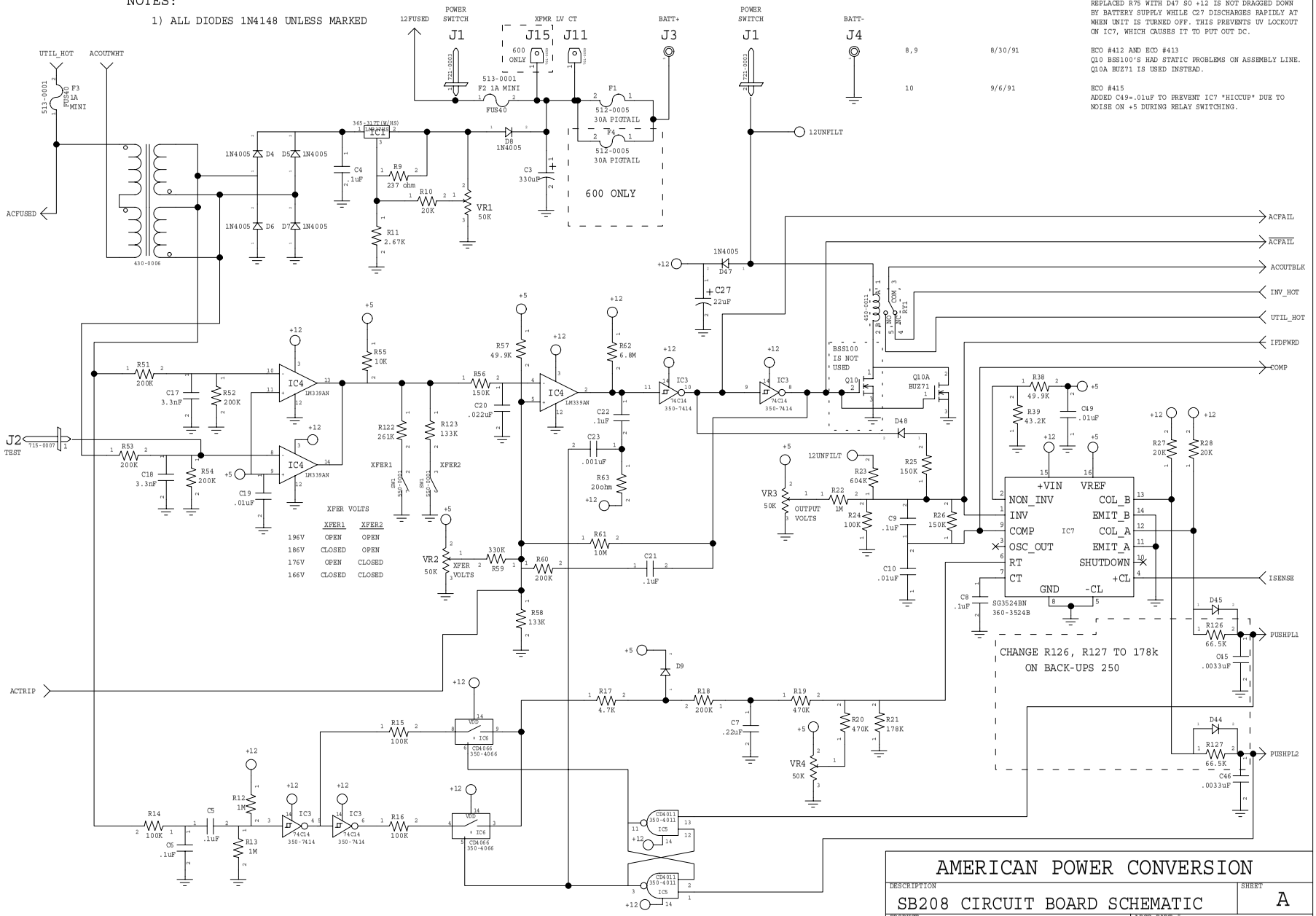

AMERICAN POWER CONVERSION

DESCRIPTION	SHEET
SB208 CIRCUIT BOARD SCHEMATIC	A
PRODUCT: 250/400/600 INT'L BACK-UPS	APCC PART #: 0S-208

DATE	BY	SCALE	DWG	REV
3/22/91	ESM		E208-10	10

NOTES:

1) ALL DIODES 1N4148

REV #	DATE	REVISION
7	7/17/91	ECO #391 AND ECO #394 R138 WAS 33K IS NOW 24.9K, C44 WAS .1uF IS NOW .22uF TO MAKE CURRENT LIMIT CIRCUIT WORK WITH STABLE +12.
8,9	8/30/91	ECO #412 AND ECO #413 NO CHANGES ON THIS SHEET
10	9/6/91	ECO #415 NO CHANGES ON THIS SHEET

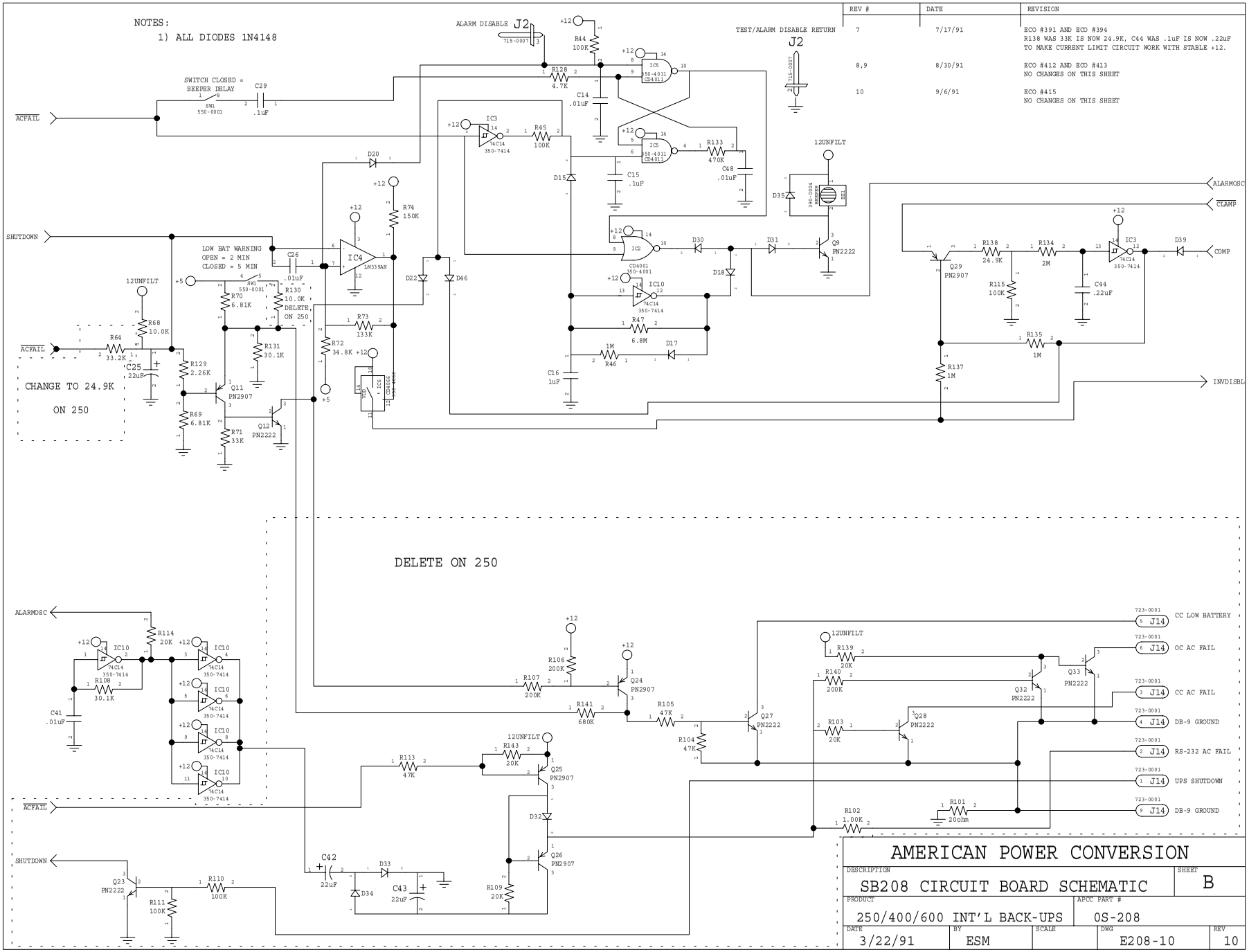

AMERICAN POWER CONVERSION

DESCRIPTION	SHEET
SB208 CIRCUIT BOARD SCHEMATIC	B

PRODUCT	APCC PART #
250/400/600 INT'L BACK-UPS	0S-208

DATE	BY	SCALE	DWG	REV
3/22/91	ESM		E208-10	10

NOTES: 1) ALL DIODES IN4148 UNLESS MARKED.
2) R99 IS MOUNTED TO CHASSIS, NOT CIRCUIT BOARD.
LEAD WIRES SOLDER INTO CIRCUIT BOARD
OR CONNECT TO BOARD VIA MTA HEADER AT
R99A AND R99B.

REV #	DATE	REVISION
7	7/17/91	ECO #391 AND ECO #394 NO CHANGES ON THIS SHEET
8,9	8/30/91	ECO #412 AND ECO #413 NO CHANGES ON THIS SHEET
10	9/6/91	ECO #415 NO CHANGES ON THIS SHEET

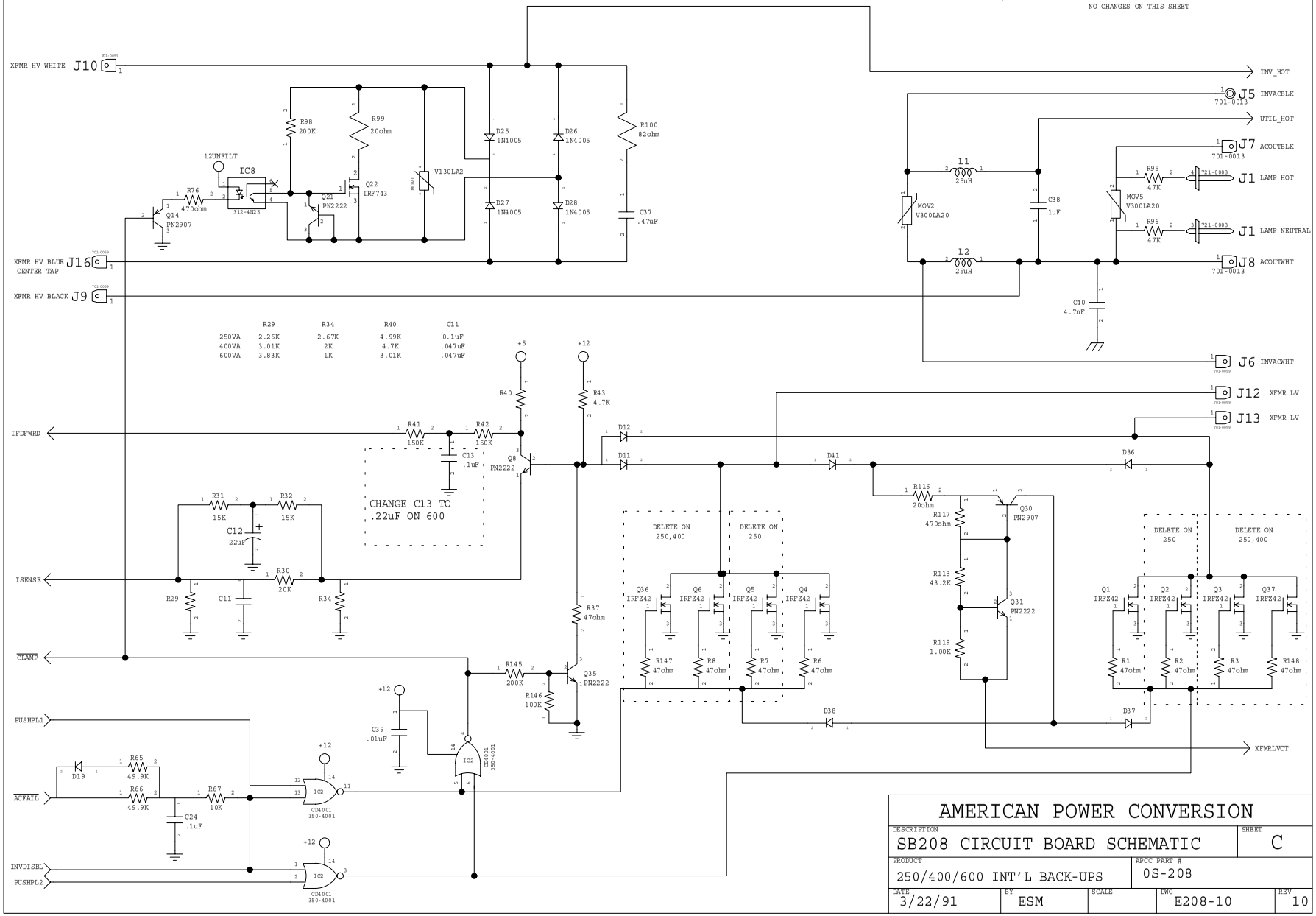

AMERICAN POWER CONVERSION				
DESCRIPTION: SB208 CIRCUIT BOARD SCHEMATIC				SHEET: C
PRODUCT: 250/400/600 INT'L BACK-UPS			APCC PART #: 0S-208	
DATE: 3/22/91	BY: ESM	SCALE:	DWG: E208-10	REV: 10