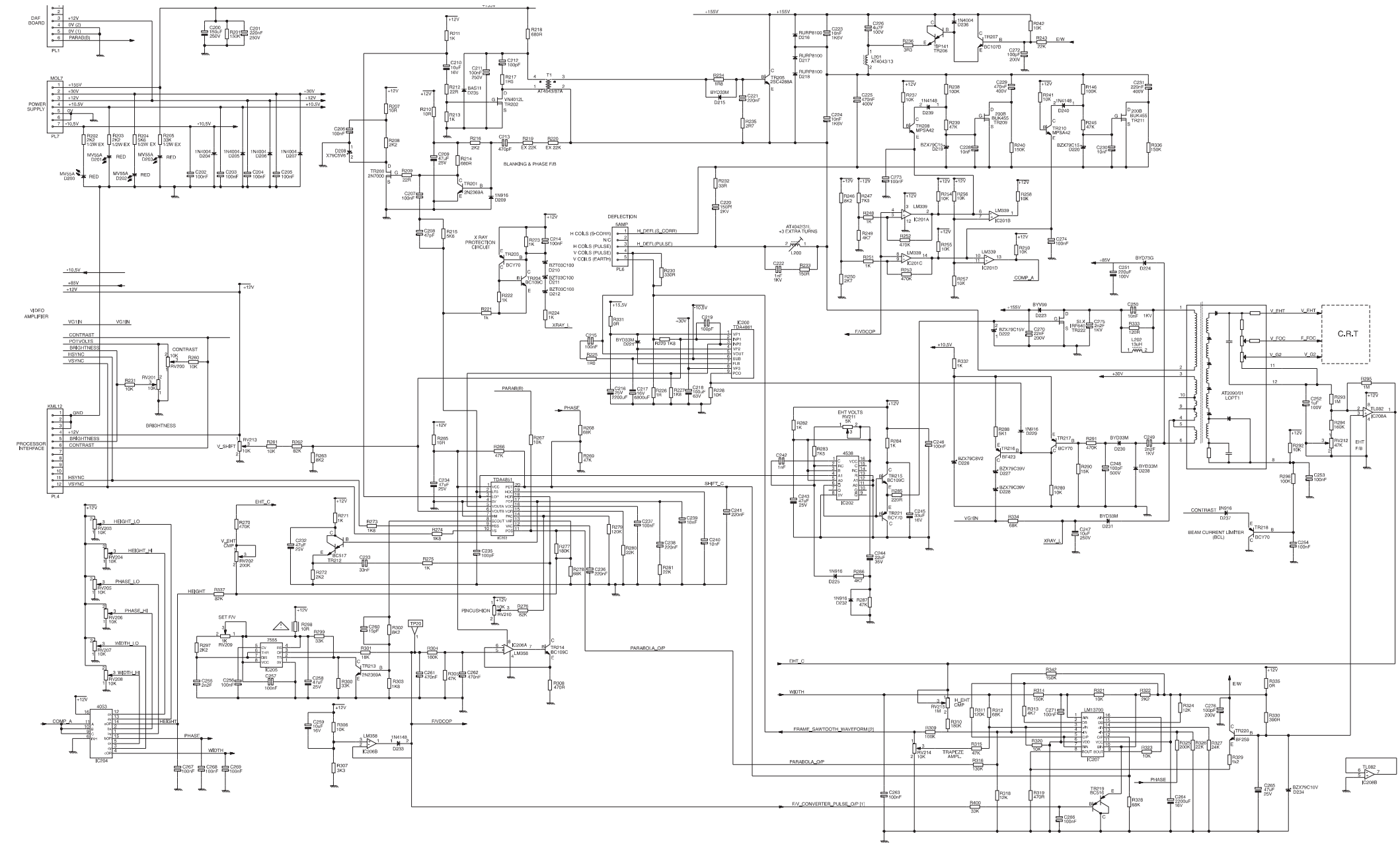
DAF BOARD
POWER SUPPLY
VIDEO AMPLIFIER
PROCESSOR INTERFACE
BLANKING & PHASE F/B
X RAY PROTECTION CIRCUIT
DEFLECTION
BRIGHTNESS
CONTRAST
EHT VOLTS
PINCUSHION
SET F/V
TRAPEZE AMPL.
BEAM CURRENT LIMITER (BCL)
C.R.T
LOPT1
PARABOLA_O/P
F/VDCOP
F_V_CONVERTER_PULSE_O/P(1)
FRAME_SAWTOOTH_WAVEFORM(2)