• AMP & DECK CIRCUIT
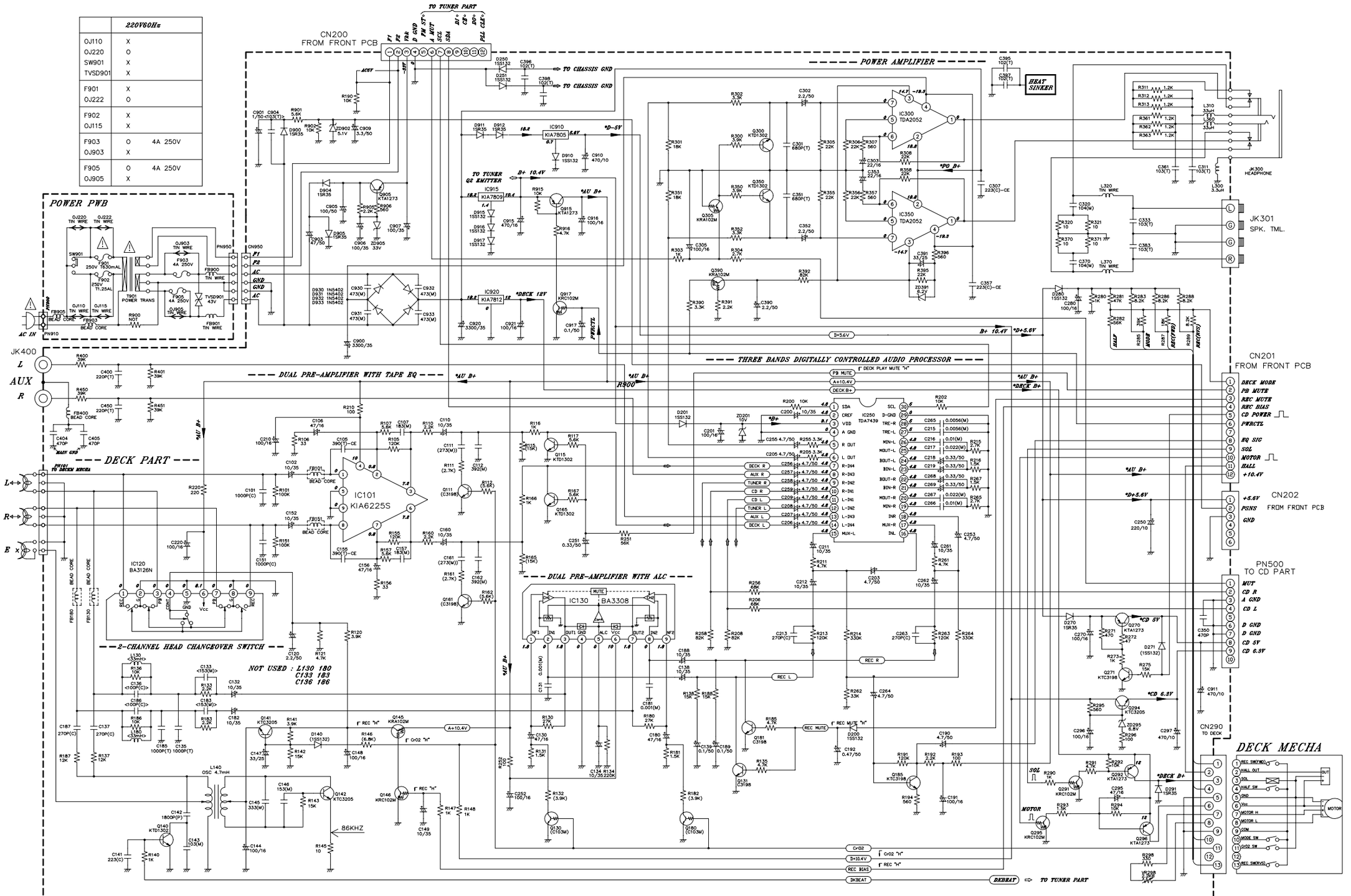
	220V60Hz	
0J110	X	
0J220	O	
SW901	X	
TVSD901	X	
F901	X	
0J222	O	
F902	X	
0J115	X	
F903	O	4A 250V
0J903	X	
F905	O	4A 250V
0J905	X