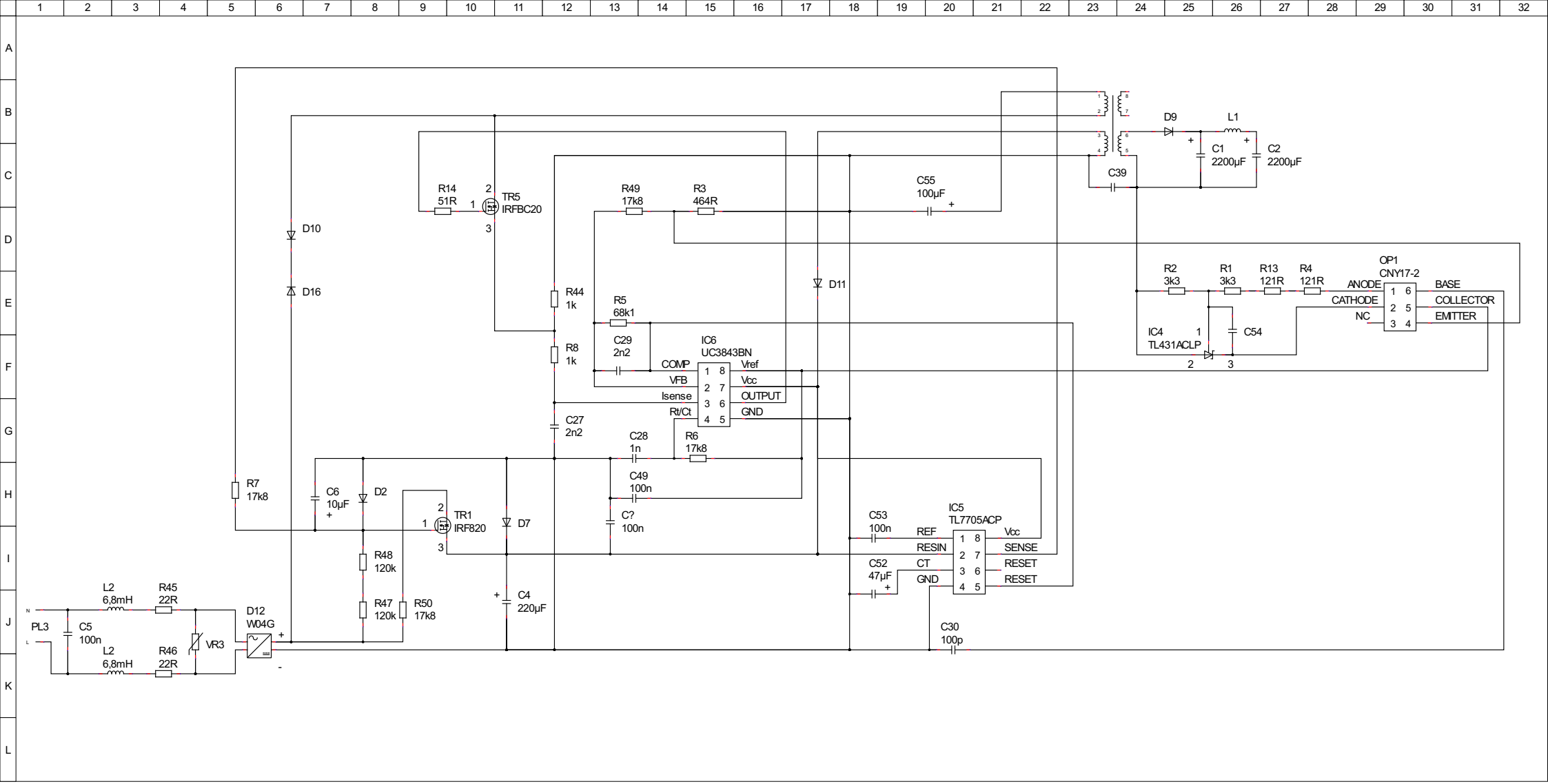
D9
L1
C1
2200µF
C2
2200µF
C39
C55
100µF
R14
51R
TR5
IRFBC20
R49
17k8
R3
464R
D10
D16
D11
R44
1k
R5
68k1
C29
2n2
IC6
UC3843BN
COMP
VFB
Isense
Rt/Ct
Vref
Vcc
OUTPUT
GND
R8
1k
C27
2n2
C28
1n
R6
17k8
C49
100n
C?
100n
R2
3k3
R1
3k3
R13
121R
R4
121R
OP1
CNY17-2
ANODE
CATHODE
NC
BASE
COLLECTOR
EMITTER
IC4
TL431ACLP
C54
R7
17k8
C6
10µF
D2
TR1
IRF820
D7
R48
120k
R47
120k
R50
17k8
C4
220µF
C53
100n
IC5
TL7705ACP
REF
RESIN
CT
GND
Vcc
SENSE
RESET
RESET
C52
47µF
C30
100p
L2
6,8mH
R45
22R
PL3
C5
100n
L2
6,8mH
R46
22R
VR3
D12
W04G