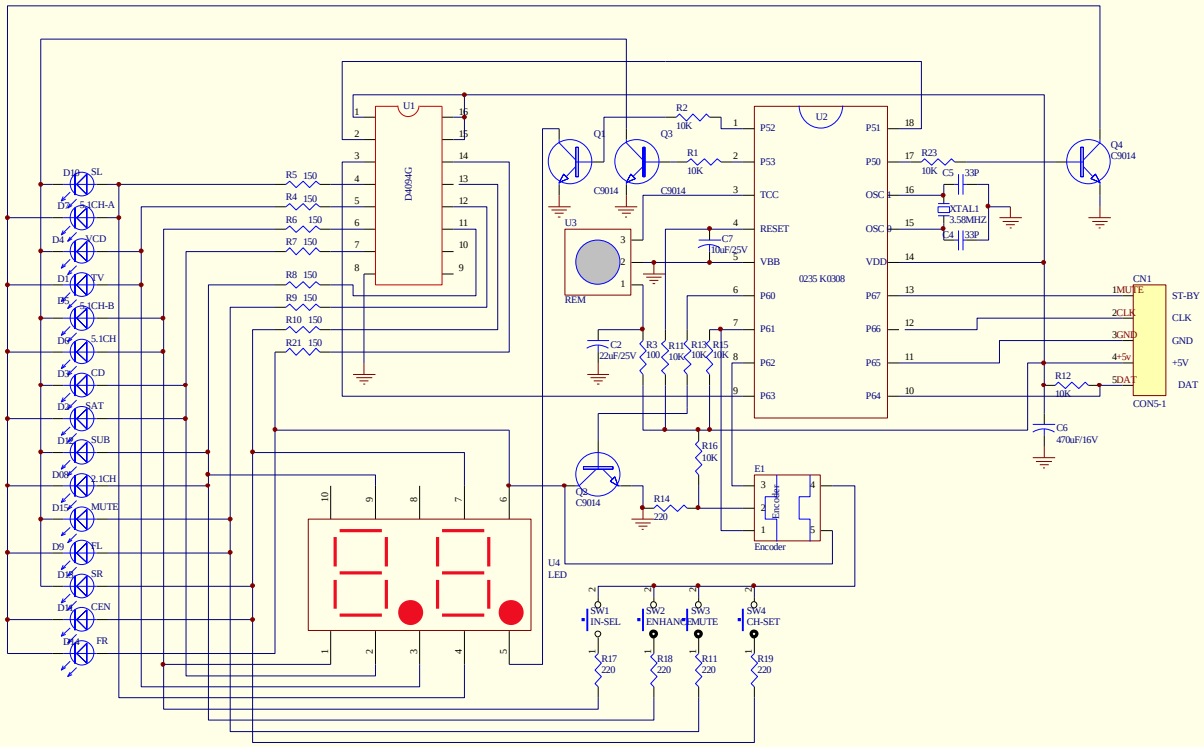


| | | | |
|---|---|---|---|
| Title | | | |
| Size A3 | Number | | Revision |
| Date: 29-Oct-2004 | | Sheet of | |
| File: | | Drawn By: | |