Applicable Country & Regions:

All Regions

Product Service Manual – Level 3

Service Manual for BenQ:
Projector/MP512
< 9H.Y1277.000>

Version: 00a
Date:2008/06/12

Notice:

For RO to input specific “Legal Requirement” in specific NS regarding to responsibility and liability statements.

Please check BenQ’s eSupport web site, http://esupport.benq.com, to ensure that you have the most recent version of this manual.

First Edition (Jun 2008)
© Copyright BenQ Corporation 2007. All Right Reserved.

Schematics—Main board:

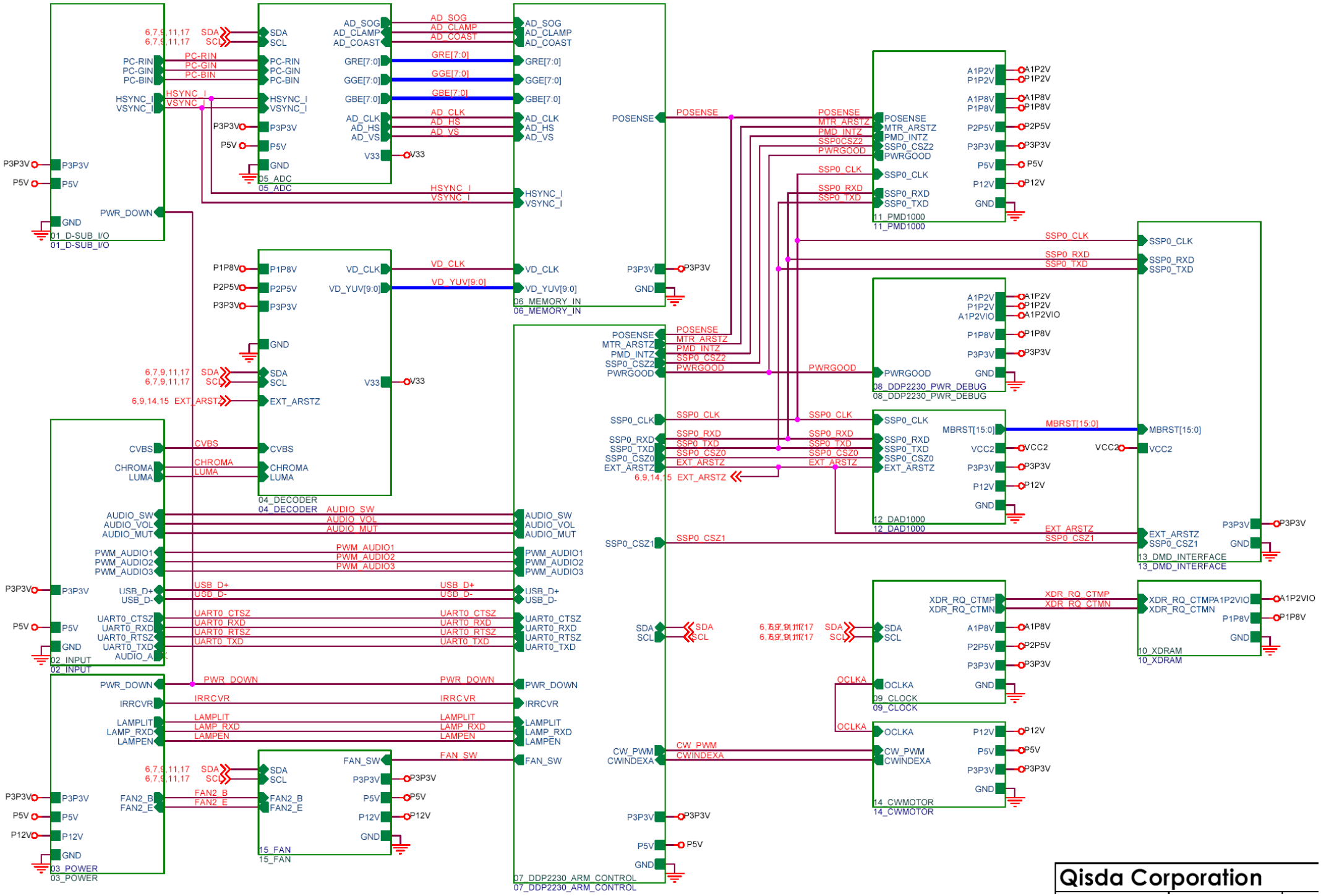

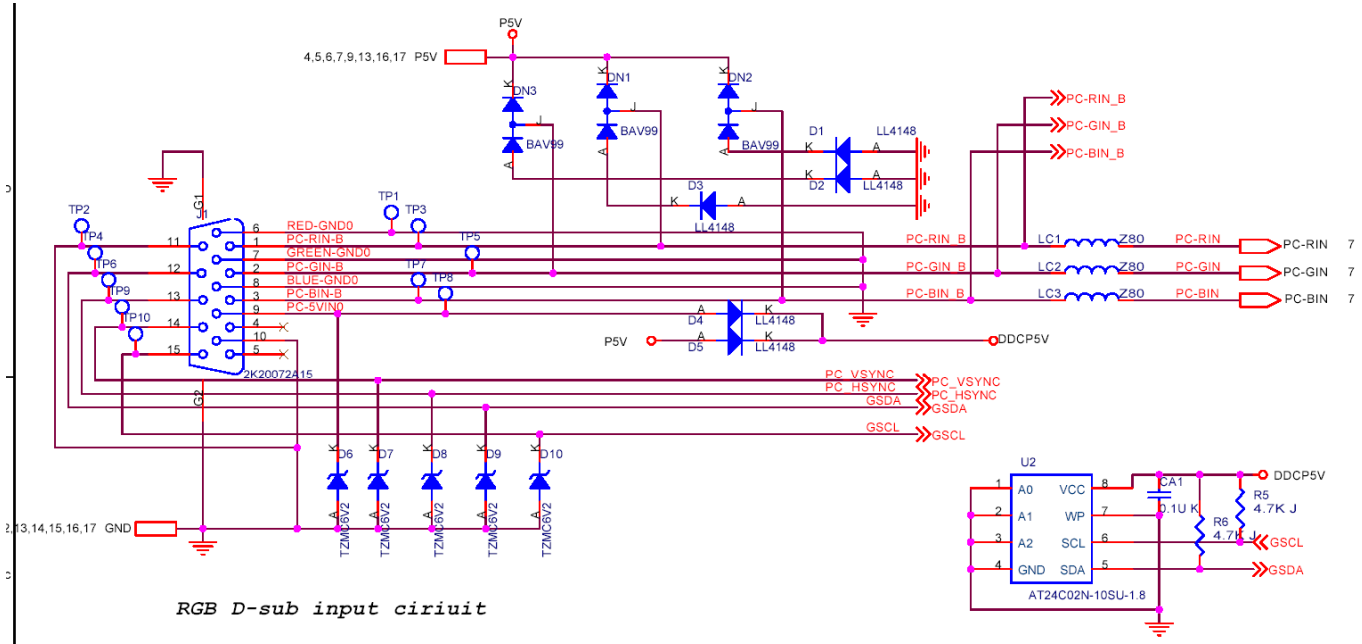

RGB D-sub input ciriuit

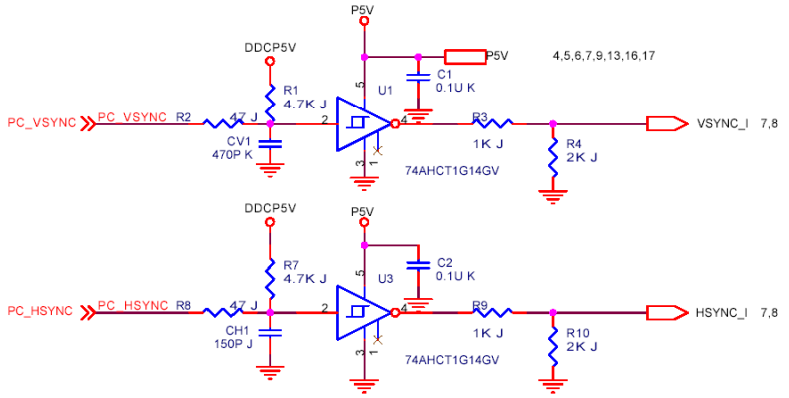

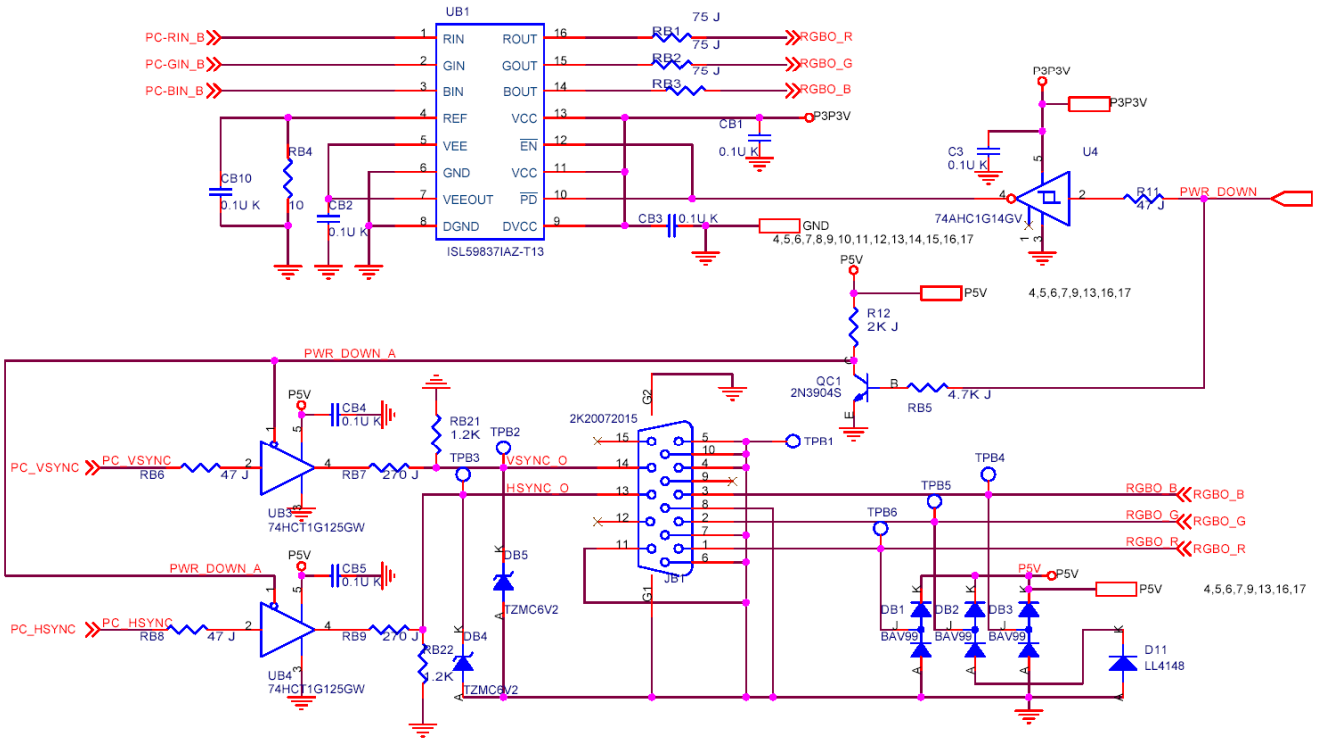

RGB D-sub output ciriuit

Qisda Corporation

Project Code: 9J.0GF77.001	Model Name: MP522	OEM/ODM Model N: <OEM/ODM>
Title: MAIN BOARD		
Size: <Size>	PCB P/N: 4H.0GF01.S03	PCB Rev.: S03
Document Number: 9J.0GF77.000-C3-304-001		
Date: Thursday, February 14, 2008	Sheet 3 of 17	

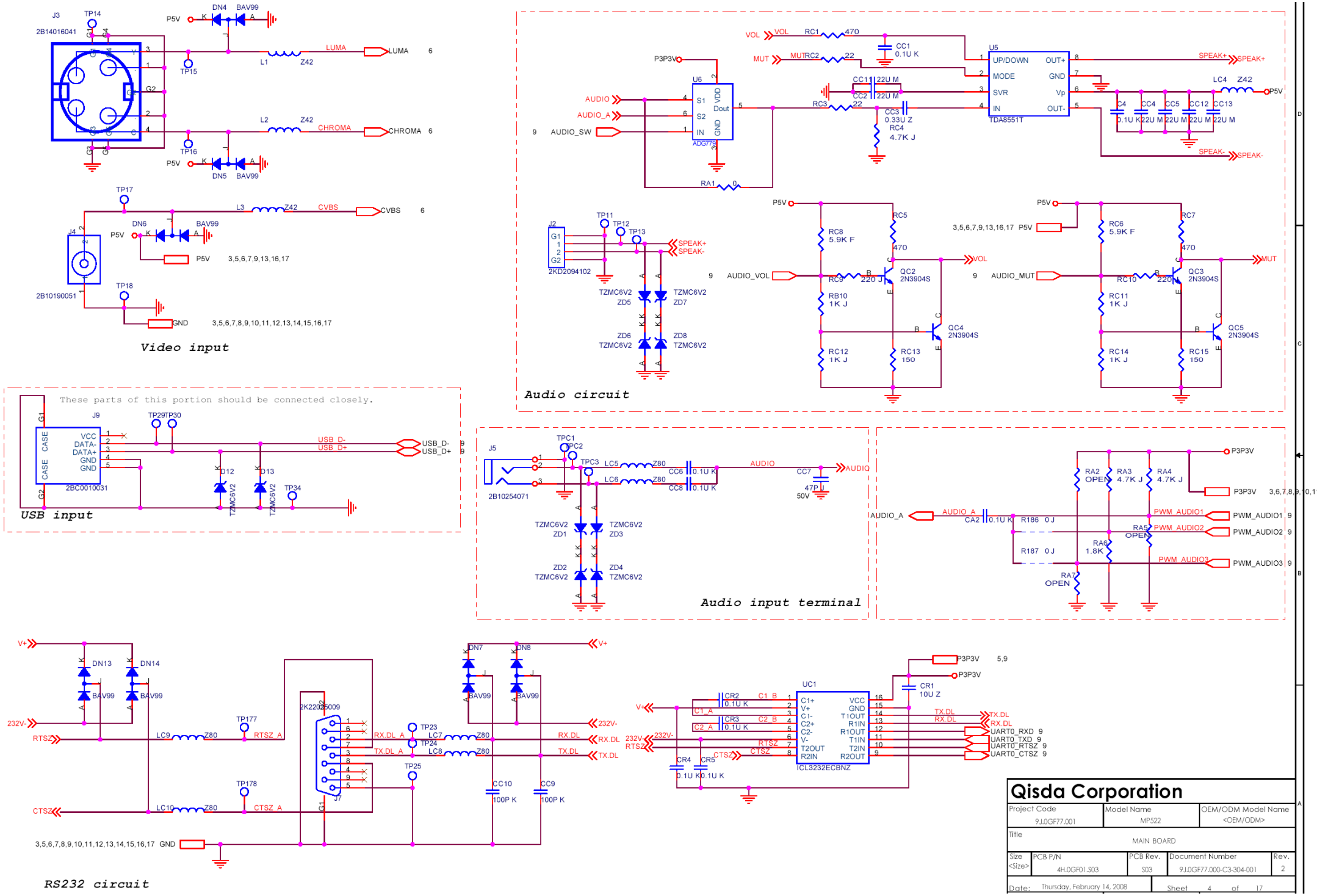
Video input
Audio circuit
USB input
These parts of this portion should be connected closely.
Audio input terminal
RS232 circuit
Qisda Corporation
Project Code
9J.0GF77.001
Model Name
MP522
OEM/ODM Model Name
<OEM/ODM>
Title
MAIN BOARD
Size
<Size>
PCB P/N
4H.0GF01.S03
PCB Rev.
S03
Document Number
9J.0GF77.000-C3-304-001
Rev.
2
Date:
Thursday, February 14, 2008
Sheet
4
of
17

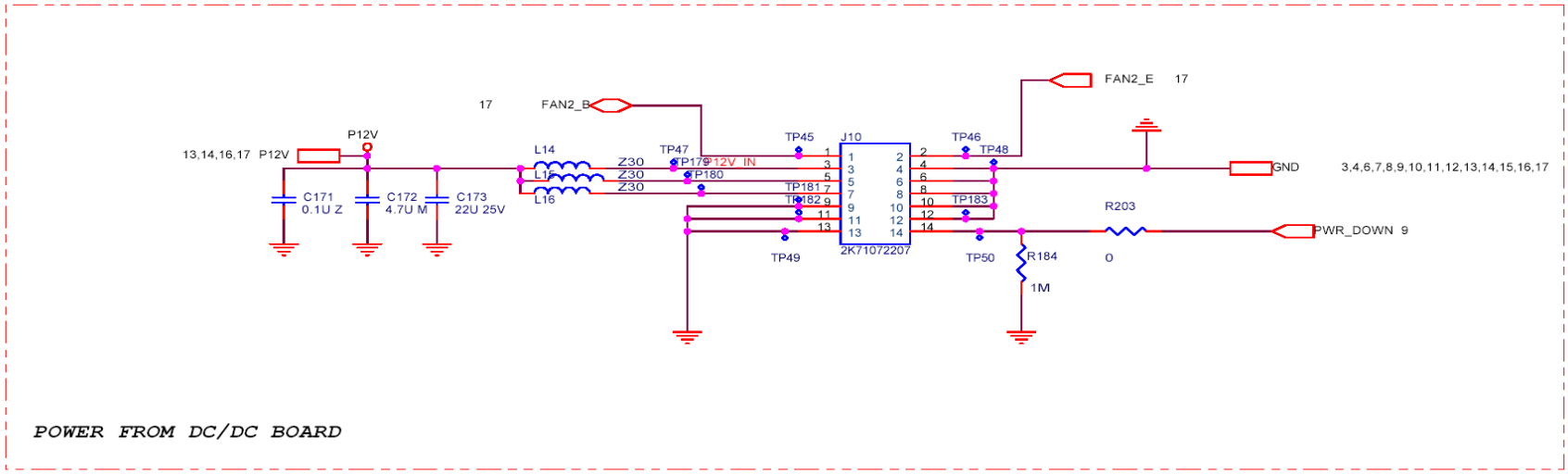

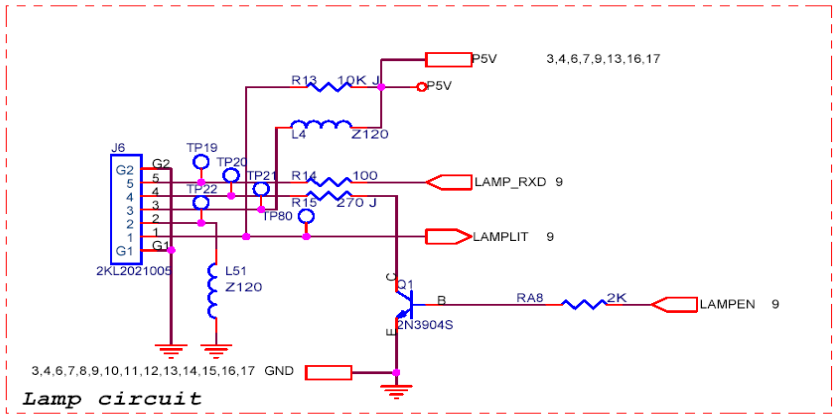

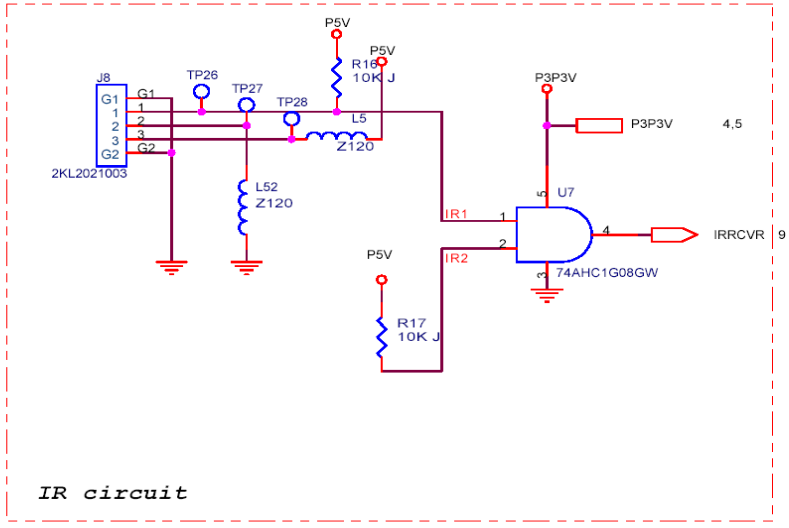

Qisda C

Project Code
9J.0GF77.001

Title

Size <Size>

PCB P/N
4H.0GF0

Date: Thursday, Feb

Prepared By
ANGEL HU

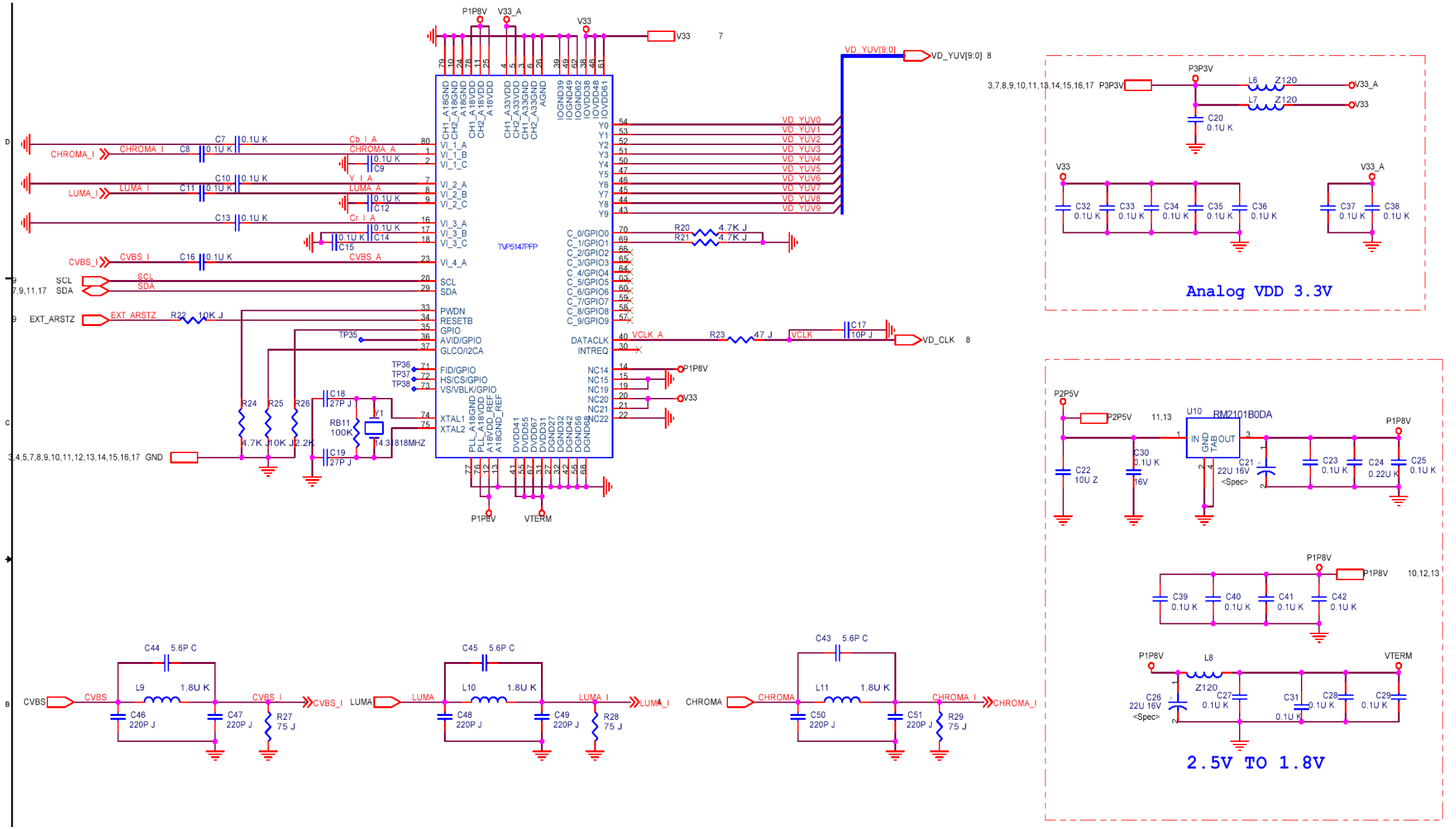

TVP5147PFP
P1P8V
V33_A
V33
VD_YUV[9:0]
VD_CLK
VCLK_A
VCLK
VTERM
CHROMA_I
LUMA_I
CVBS_I
SCL
SDA
EXT_ARSTZ
GND
CVBS
LUMA
CHROMA
Cb_I_A
Y_I_A
Cr_I_A
CVBS_A
CHROMA_A
LUMA_A
Y1
14.31818MHZ
RB11
100K
R20
R21
4.7K J
R22
10K J
R23
47 J
C17
10P J
R24
R25
R26
4.7K J
10K J
2.2K
C18
27P J
C19
27P J
C44
5.6P C
C45
5.6P C
C43
5.6P C
L9
L10
L11
1.8U K
C46
220P J
C47
220P J
C48
220P J
C49
220P J
C50
220P J
C51
220P J
R27
75 J
R28
75 J
R29
75 J
P3P3V
L6
L7
Z120
C20
0.1U K
C32
C33
C34
C35
C36
C37
C38
Analog VDD 3.3V
P2P5V
U10
RM2101B0DA
IN
GND
TAB
OUT
C22
10U Z
C30
0.1U K
16V
C21
22U 16V
<Spec>
C23
0.1U K
C24
0.22U K
C25
0.1U K
C39
C40
C41
C42
C26
22U 16V
<Spec>
C27
C28
C29
C31
2.5V TO 1.8V

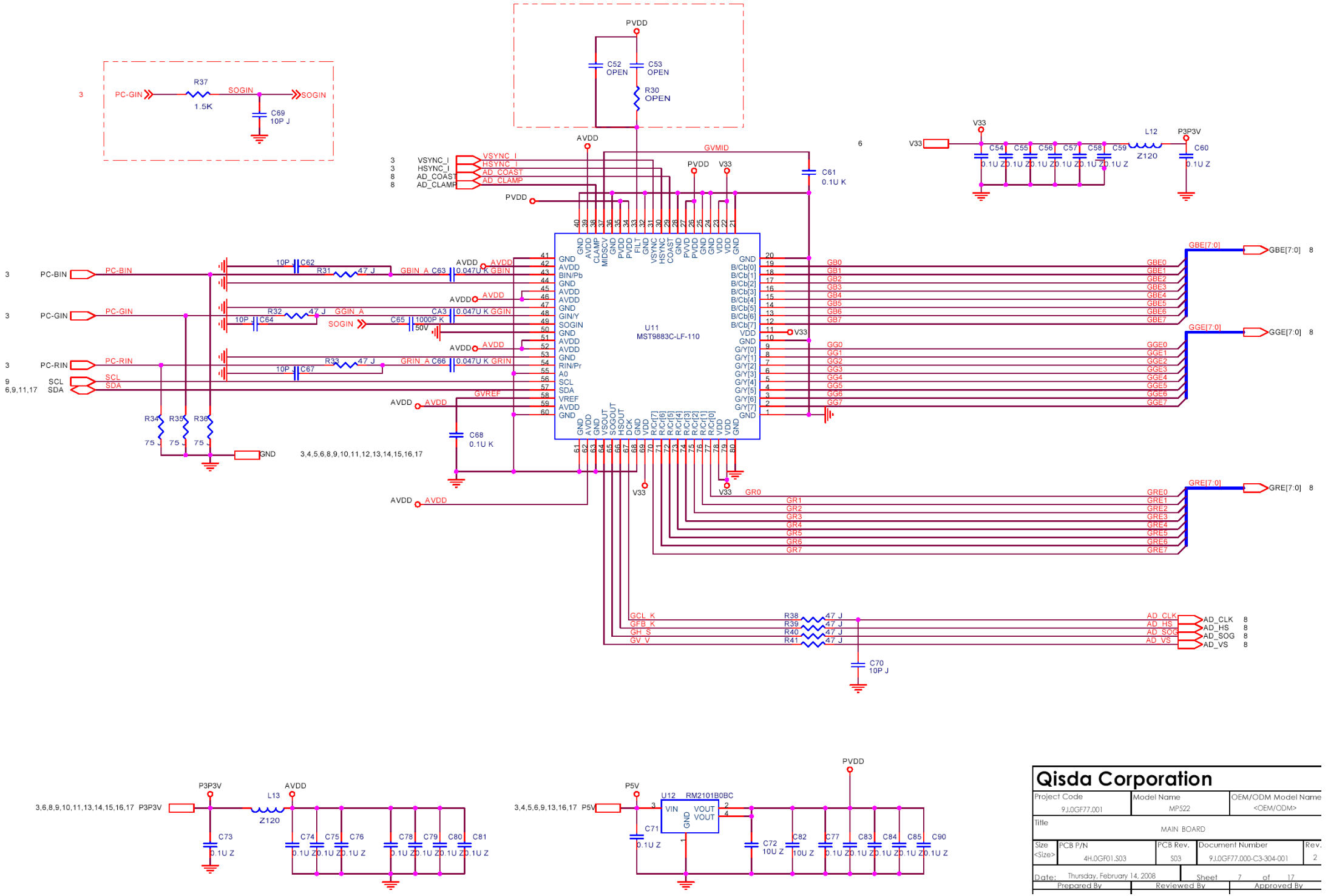
PVDD
C52 OPEN
C53 OPEN
R30 OPEN
R37
1.5K
C69 10P J
PC-GIN
SOGIN
AVDD
GVMID
VSYNC_I
HSYNC_I
AD_COAST
AD_CLAMP
C61 0.1U K
V33
L12
P3P3V
C54 C55 C56 C57 C58 C59 Z120 C60
0.1U Z
U11
MST9883C-LF-110
PC-BIN
PC-GIN
PC-RIN
SCL
SDA
R31 47 J
R32 47 J
R33 47 J
C62 10P J
C63 0.047U K
C64 10P J
C65 1000P K 50V
C66 0.047U K
C67 10P J
GBIN_A
GGIN_A
GRIN_A
GBIN
GGIN
GRIN
GVREF
R34 R35 R36
75 J
GND
C68 0.1U K
GB0 GB1 GB2 GB3 GB4 GB5 GB6 GB7
GG0 GG1 GG2 GG3 GG4 GG5 GG6 GG7
GR0 GR1 GR2 GR3 GR4 GR5 GR6 GR7
GBE[7:0]
GGE[7:0]
GRE[7:0]
GCL_K
GFB_K
GH_S
GV_V
R38 R39 R40 R41 47 J
AD_CLK
AD_HS
AD_SOG
AD_VS
C70 10P J
P3P3V
L13
Z120
C73 C74 C75 C76 C78 C79 C80 C81
0.1U Z
P5V
U12 RM2101B0BC
VIN
VOUT
GND
C71 0.1U Z
C72 10U Z
C82 10U Z
C77 C83 C84 C85 C90
Qisda Corporation
Project Code 9J.0GF77.001
Model Name MP522
OEM/ODM Model Name <OEM/ODM>
Title MAIN BOARD
Size <Size>
PCB P/N 4H.0GF01.S03
PCB Rev. S03
Document Number 9J.0GF77.000-C3-304-001
Rev. 2
Date: Thursday, February 14, 2008
Sheet 7 of 17
Prepared By
Reviewed By
Approved By

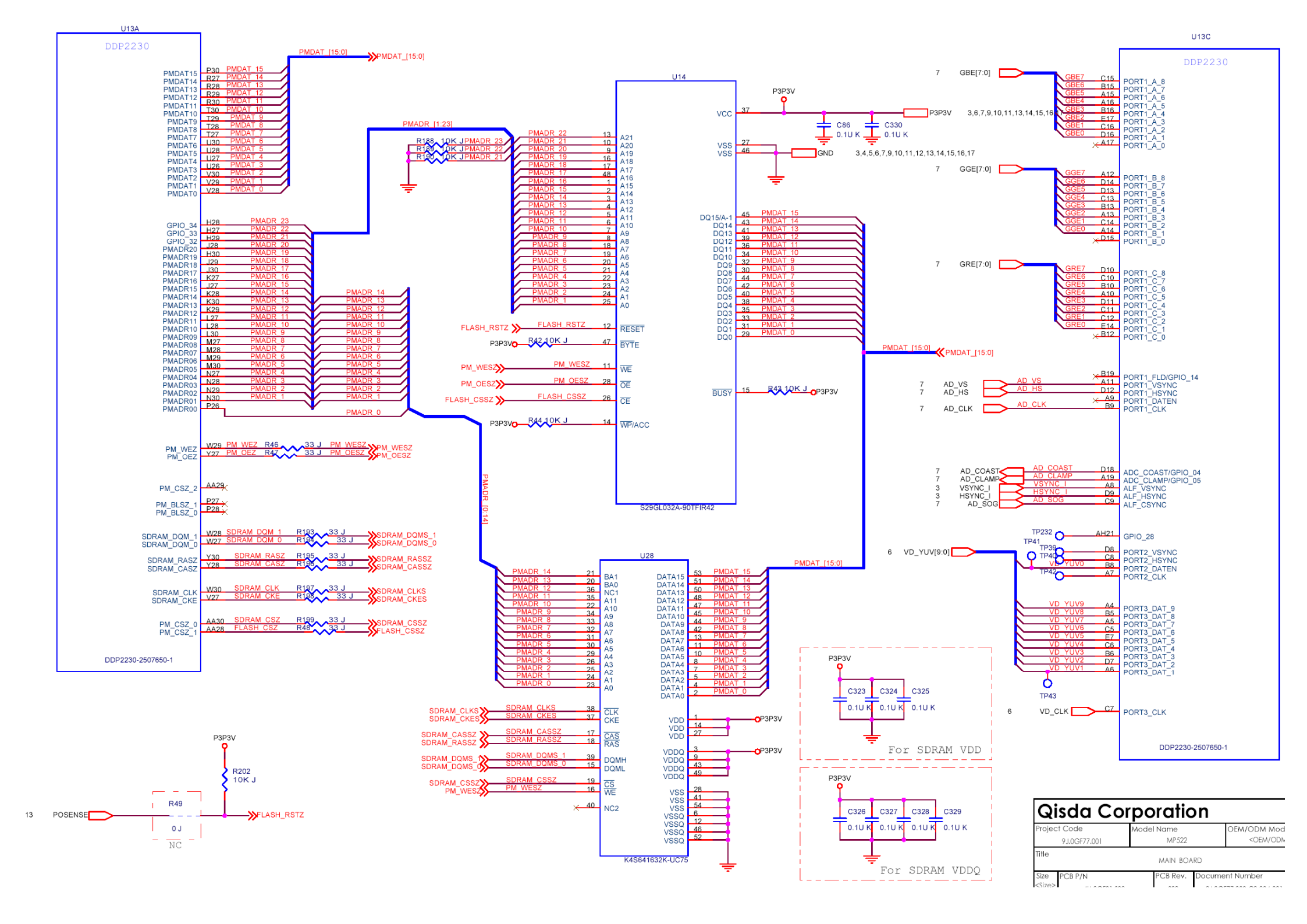
U13A
DDP2230
DDP2230-2507650-1
U14
S29GL032A-90TFIR42
U28
K4S641632K-UC75
U13C
DDP2230
DDP2230-2507650-1
For SDRAM VDD
For SDRAM VDDQ
Qisda Corporation
Project Code
9J.0GF77.001
Model Name
MP522
OEM/ODM Mod
<OEM/ODM
Title
MAIN BOARD
Size
<Size>
PCB P/N
PCB Rev.
Document Number

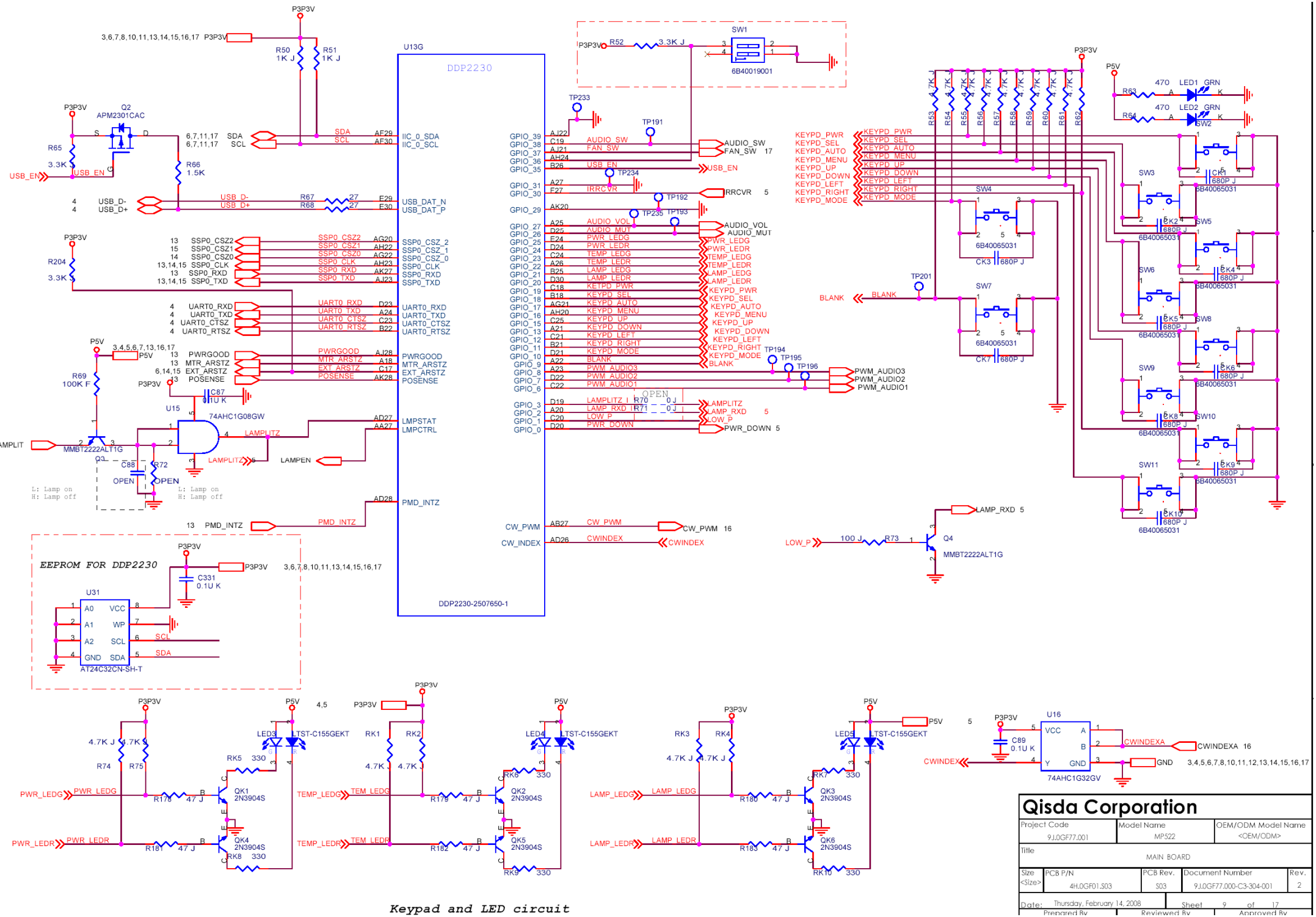

Keypad and LED circuit

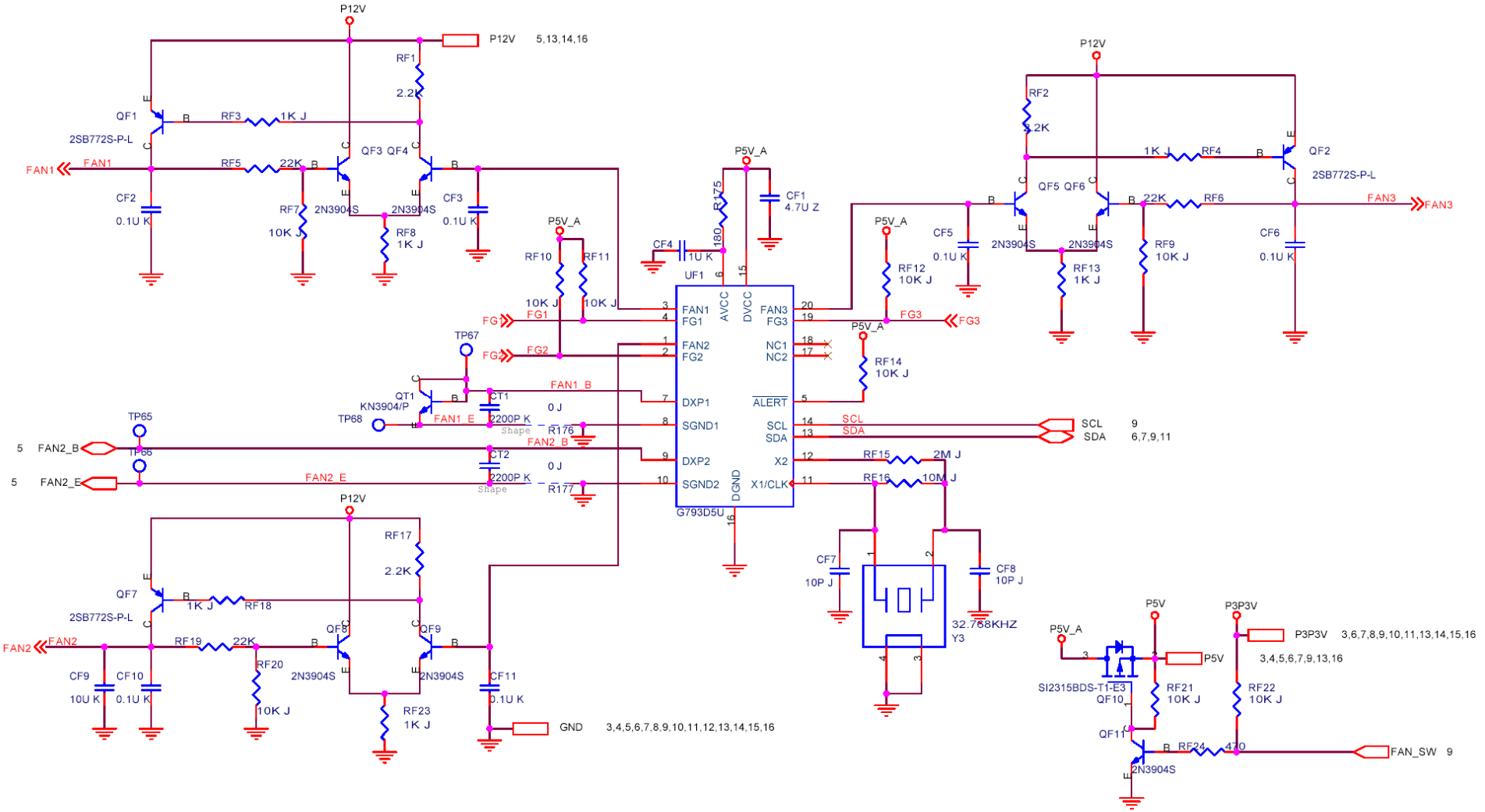

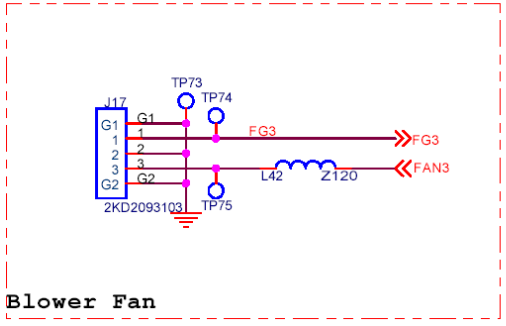

Blower Fan

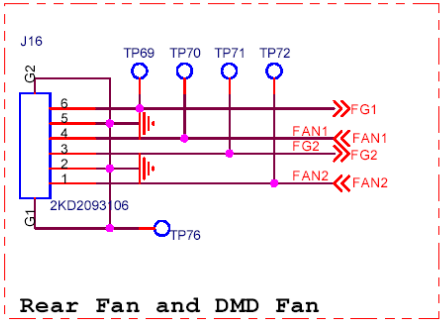

Rear Fan and DMD Fan

Qisda Corporation		
Project Code: 9J.0GF77.001	Model Name: MP522	OEM
Title: MAIN BOARD		
Size	PCB P/N	PCB Rev.	Document Nu

Power board:

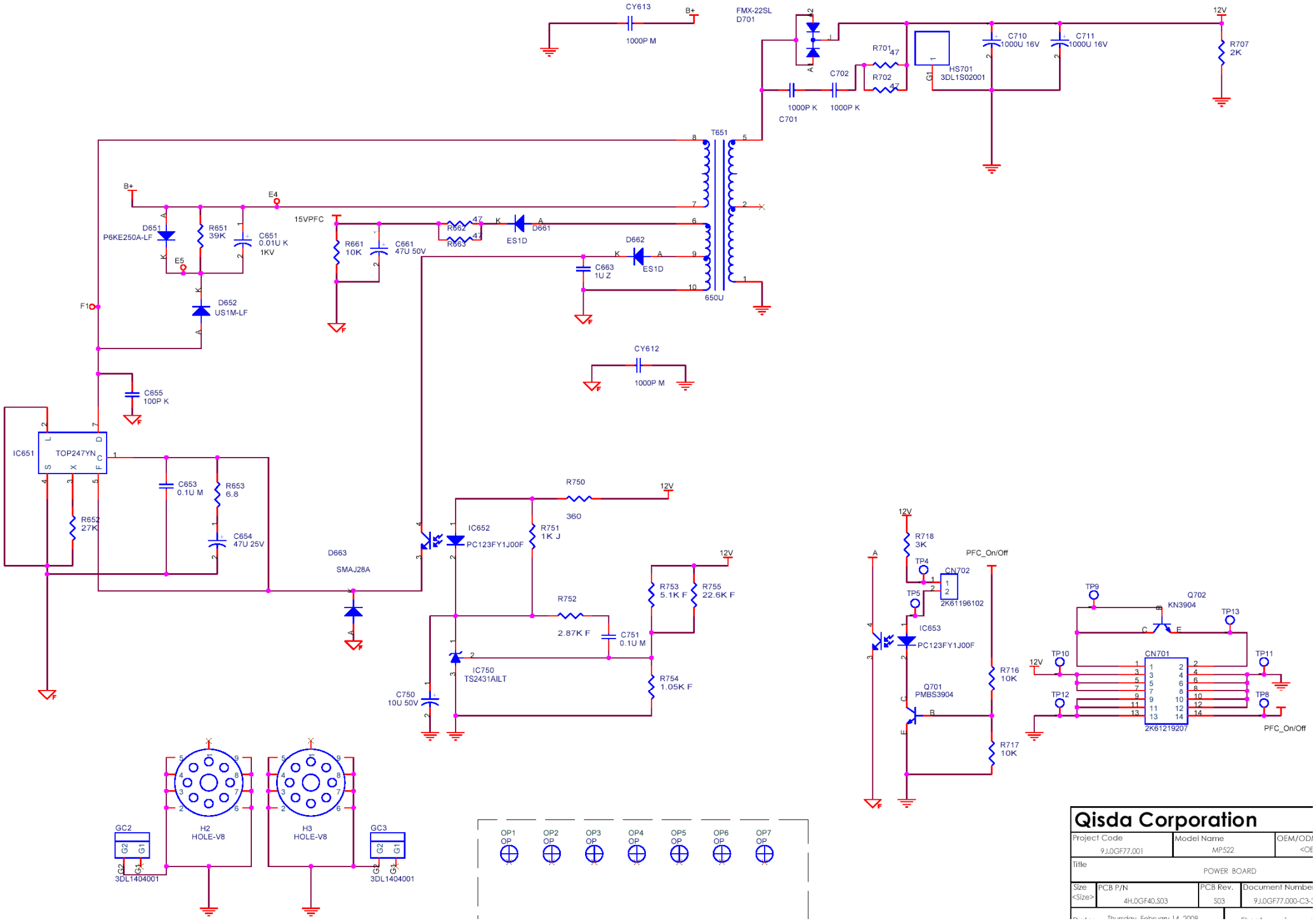

Qisda Corporation			
Project Code	Model Name	OEM/ODM	
9J.0GF77.001	MP522	<OEM>	
Title	POWER BOARD		
Size <Size>	PCB P/N 4H.0GF40.S03	PCB Rev. S03	Document Number 9J.0GF77.000-C3-3
Date: Thursday, February 14, 2008		Sheet	

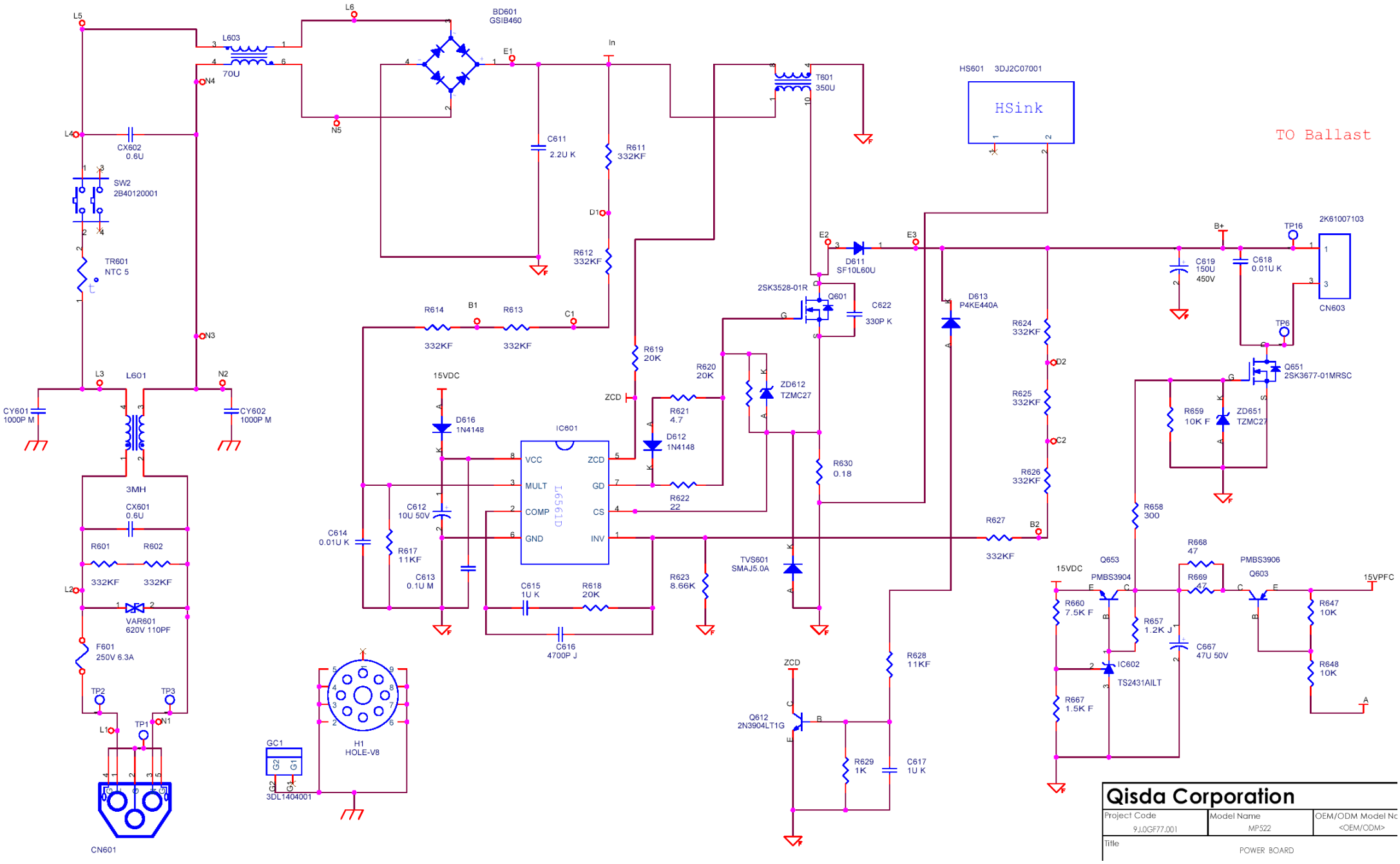

Qisda Corporation		
Project Code	Model Name	OEM/ODM Model No
9J.0GF77.001	MP522	<OEM/ODM>
Title	POWER BOARD	

PCB Artwork—Main board:

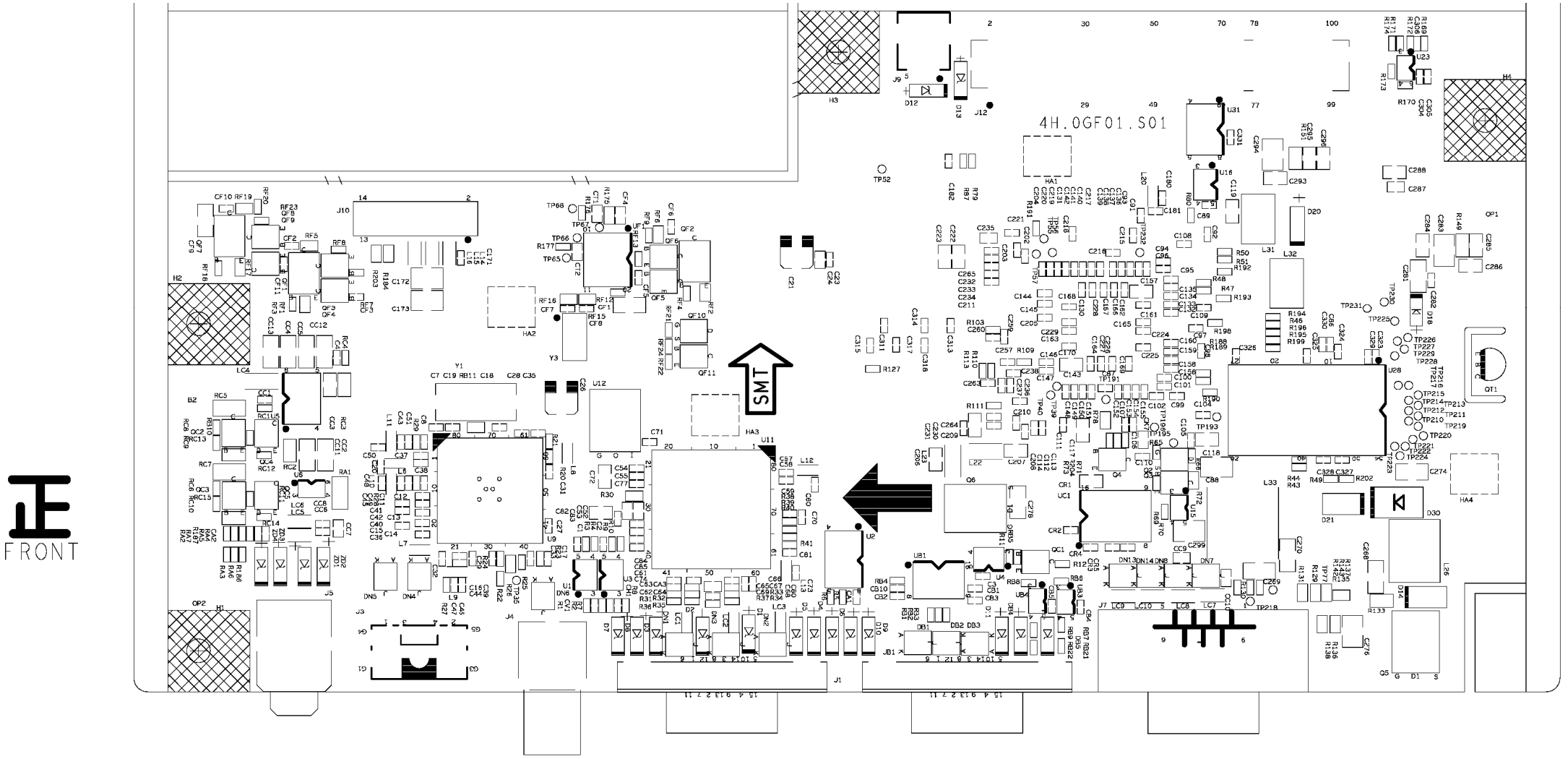

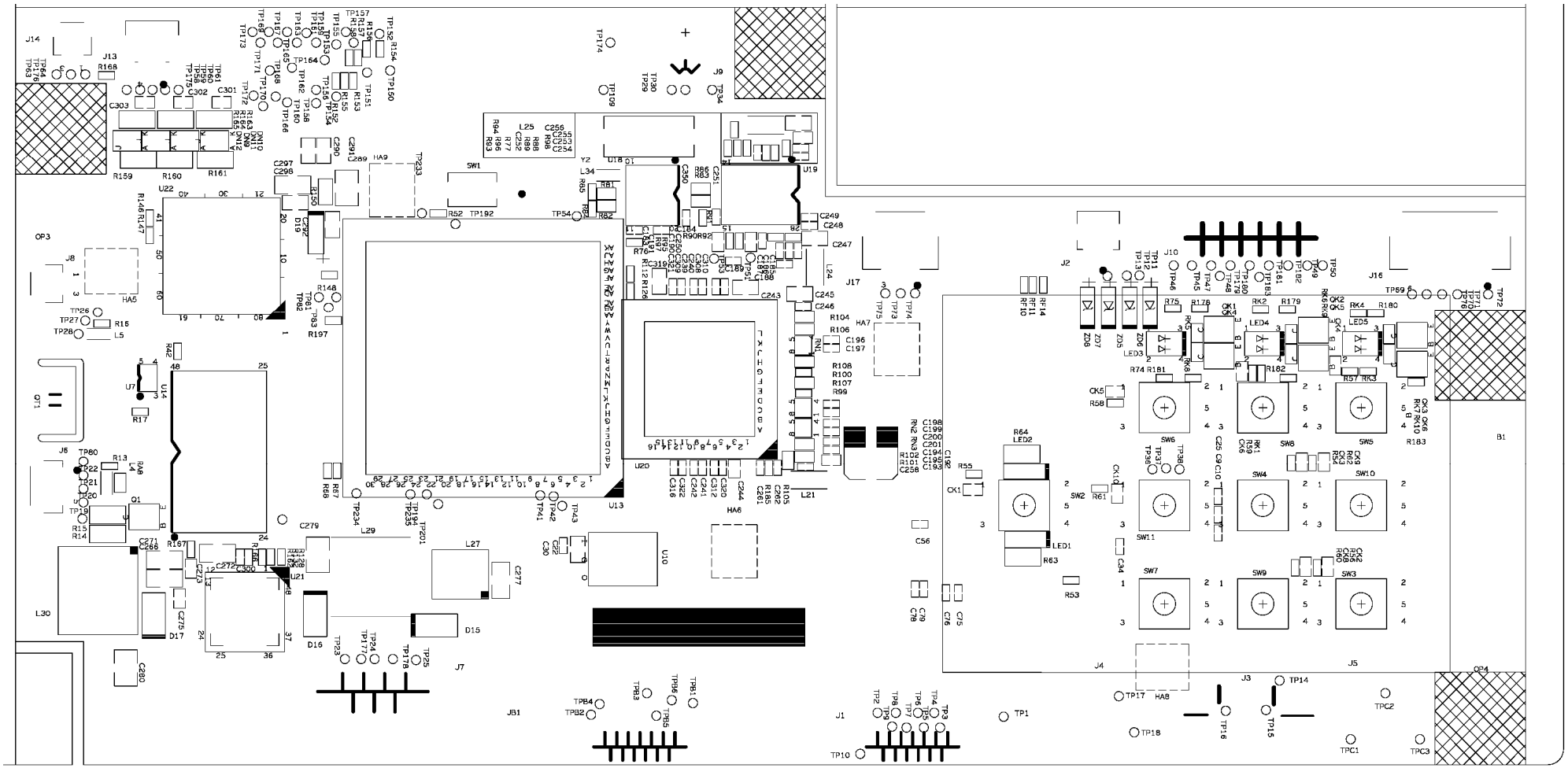
FRONT

Power board:

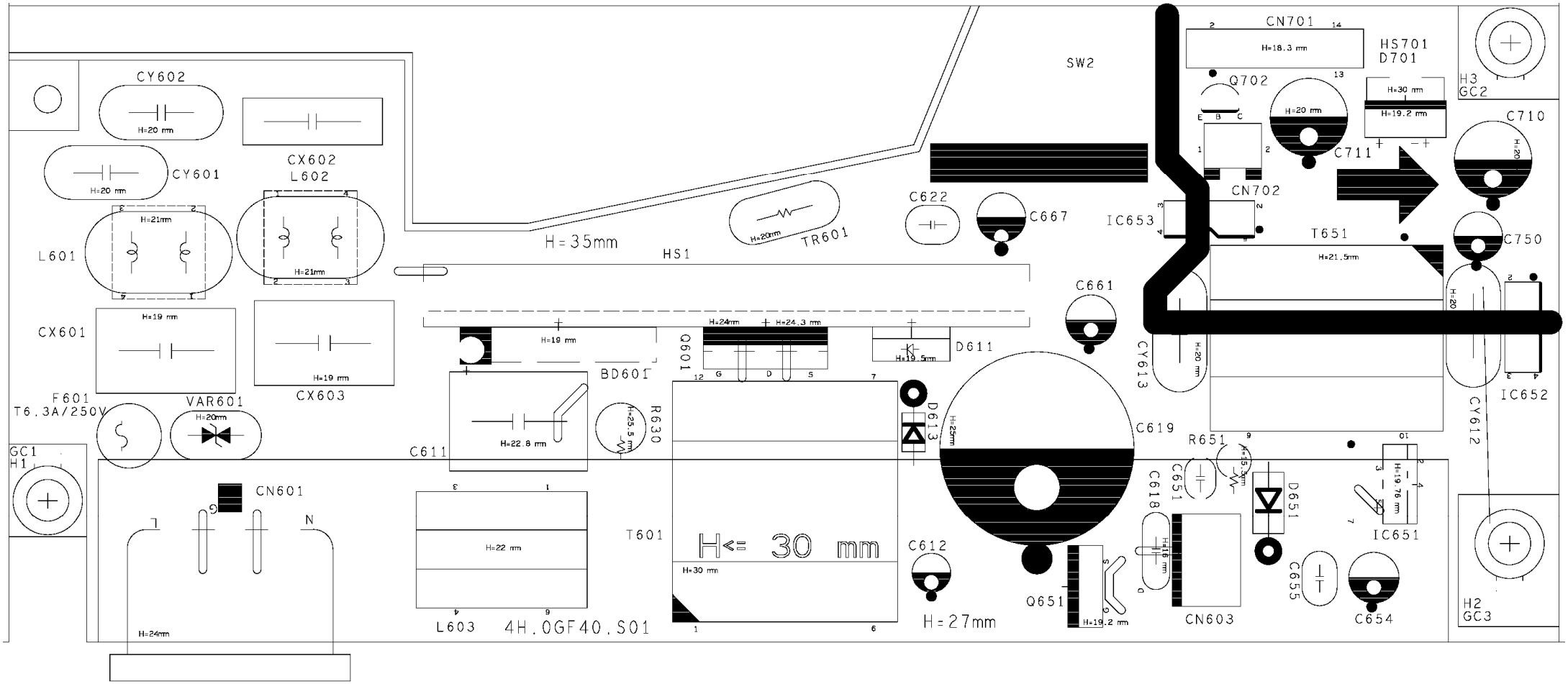

CY602
H=20 mm
CX602
L602
CY601
H=20 mm
H=21mm
L601
H=21mm
CX601
H=19 mm
CX603
H=19 mm
F601
T6.3A/250V
VAR601
H=20mm
GC1
H1
CN601
L
N
H=24mm
H=35mm
HS1
H=20mm
TR601
SW2
C622
C667
IC653
CN701
H=18.3 mm
HS701
D701
Q702
H=20 mm
H=30 mm
H=19.2 mm
C711
CN702
T651
H=21.5mm
H3
GC2
C710
C750
IC652
CY612
C661
CY613
H=20 mm
H=24mm
H=24.3 mm
Q601
H=19 mm
BD601
D611
H=19.5mm
D613
H=25mm
C619
R651
H=22.8 mm
C611
H=25.5 mm
R630
H=22 mm
L603
4H.0GF40.S01
T601
H<= 30 mm
H=30 mm
C612
H=27mm
Q651
H=19.2 mm
C618
C651
D651
H=19.76 mm
IC651
CN603
C655
C654
H2
GC3

OP2
CN701
TP11
TP8
TP12
TP10
TP9
HS701
D701
C711
R718
Q702
TP4
SW2
R702
R701
C702
C701
C751
R752
R717
R716
TP5
CN702
C710
R750
R751
C750
R707
R755
R753
R754
IC750
Q701
IC653
CY612
CY613
IC652
T651
D663
OP3
C663
D662
R652
C653
IC651
D651
R651
C651
D652
R653
C654
C655
TP16
CN603
C618
TP6
Q651
R648
R647
Q603
R668
R669
C667
R661
D661
R662
R663
C661
C622
TR601
H=23.3 mm
D611
Q601
R624
R625
R626
D613
R619
R628
C617
R629
Q612
C613
IC601
R627
R623
C616
C615
R618
D616
C612
R658
R657
Q653
R660
ZD651
R659
IC602
R667
R621
R620
D612
R622
ZD612
R630
R613
R612
TVS601
R614
R611
R617
C614
T601
C611
L603
HS1
BD601
CX602
CY602
CY601
L601
L602
CX601
R602
R601
CX603
VAR601
F601
TP3
TP2
CN601
TP1
N
G
L
OP5
OP1