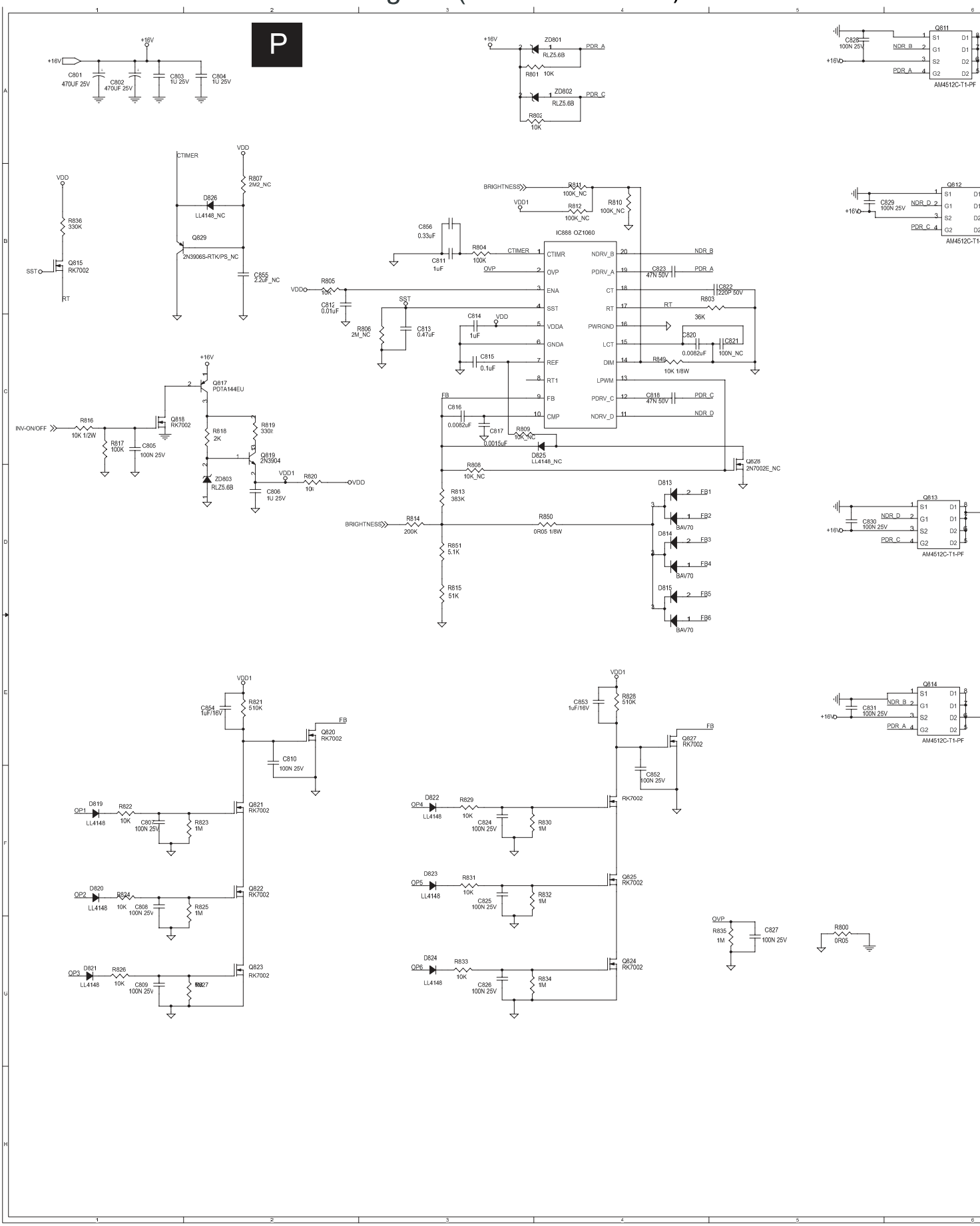Power Board Schematic Diagram(for 20PFL4122)