Power (ver.2)

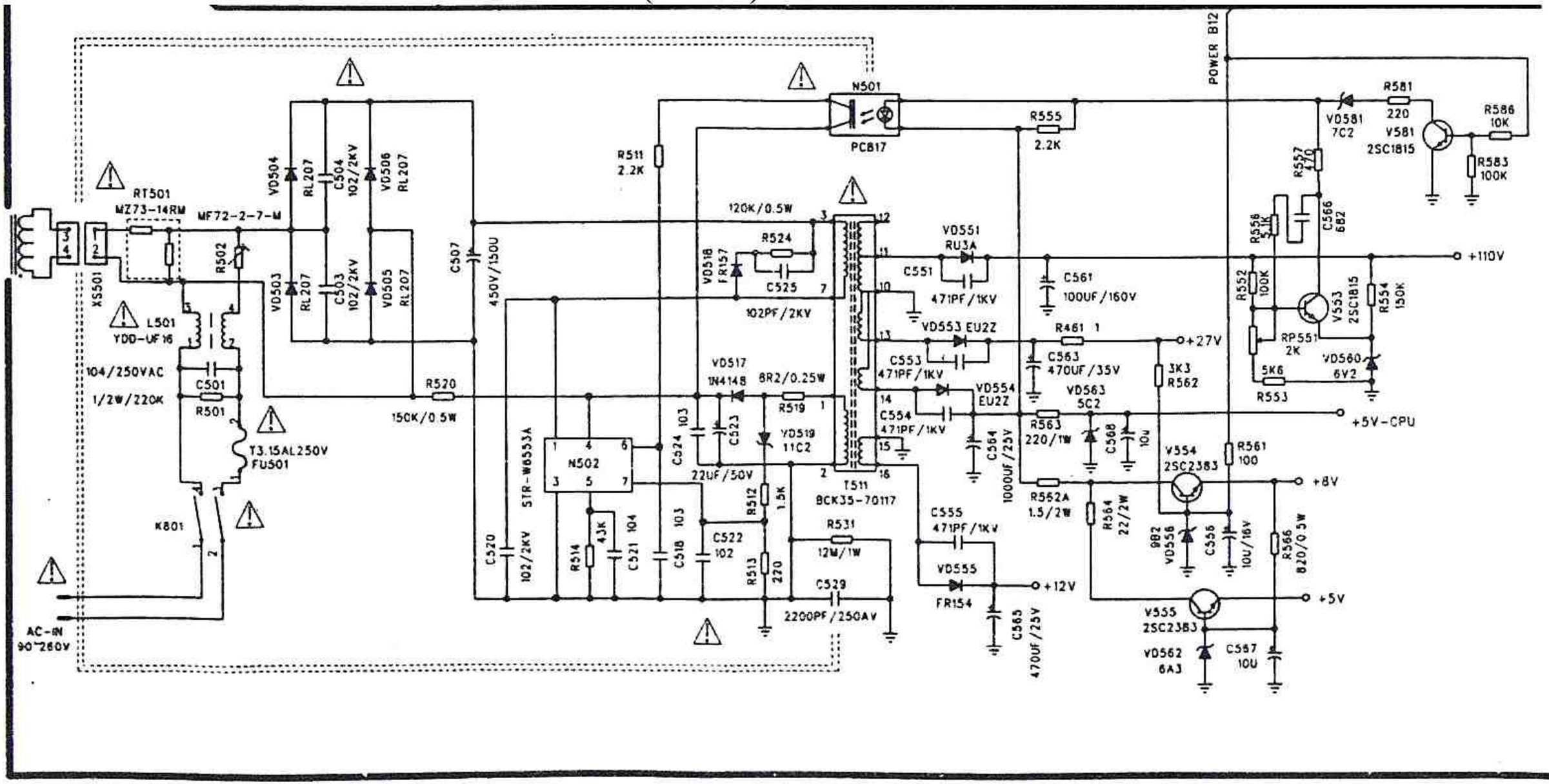
RT501
MZ73-14RM
MF72-2-7-M
XS501
L501
YDD-UF16
104/250VAC
C501
1/2W/220K
R501
T3.15AL250V
FU501
K801
AC-IN
90~260V
R502
VD504
RL207
C504
102/2KV
VD506
RL207
VD503
RL207
C503
102/2KV
VD505
RL207
C507
450V/150U
R520
150K/0.5W
C520
102/2KV
STR-W6553A
N502
R514
43K
C521
104
C518
103
C522
102
R511
2.2K
N501
PC817
R555
2.2K
120K/0.5W
R524
C525
102PF/2KV
VD518
FR157
VD517
1N4148
8R2/0.25W
R519
VD519
11C2
C524
103
C523
22UF/50V
R512
1.5K
R513
220
R531
12W/1W
C529
2200PF/250AV
T511
BCK35-70117
VD551
RU3A
C551
471PF/1KV
VD553 EU2Z
C553
471PF/1KV
VD554
EU2Z
C554
471PF/1KV
C555
471PF/1KV
VD555
FR154
C561
100UF/160V
R461 1
C563
470UF/35V
VD563
5C2
R563
220/1W
C564
1000UF/25V
R562A
1.5/2W
C565
470UF/25V
3K3
R562
C568
10u
R564
22/2W
V554
2SC2383
R561
100
V555
2SC2383
VD562
6A3
C567
10U
R566
820/0.5W
C556
10U/16V
POWER B12
R581
220
VD581
7C2
V581
2SC1815
R586
10K
R583
100K
R557
470
C566
682
R558
5.1K
R552
100K
V553
2SC1815
R554
150K
RP551
2K
VD560
6V2
5K6
R553
+110V
+27V
+5V-CPU
+8V
+12V
+5V

14"/21" COLOR TV BASIC SCHEMATIC DIAGRAM

Model:KLX-TS198 Ver:A01

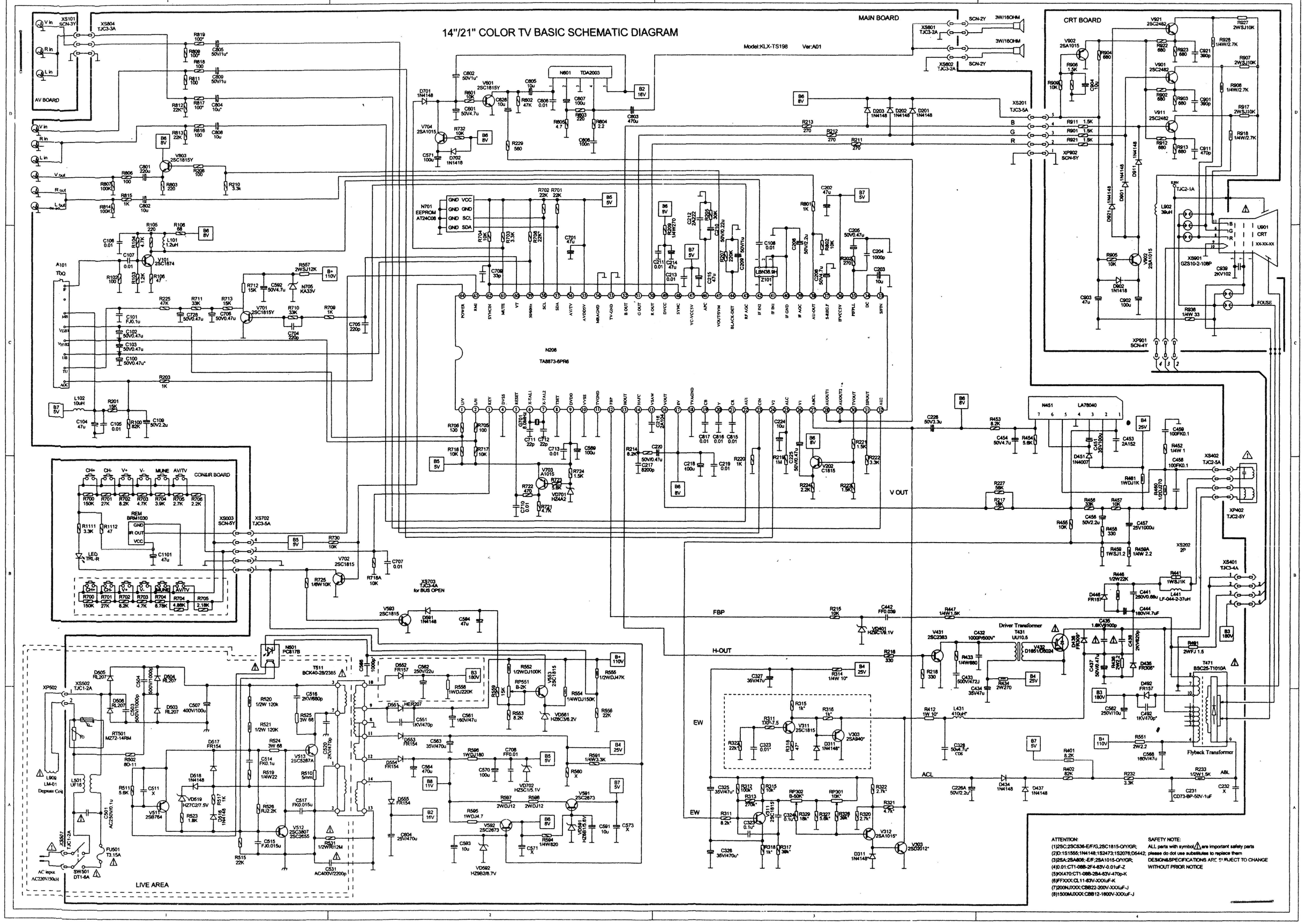
MAIN BOARD
CRT BOARD
AV BOARD
CON&IR BOARD
LIVE AREA
N206
TA8873-6PR6
N701
EEPROM
AT24C08
N601
TDA2003
N451
LA78040
V OUT
FBP
H-OUT
EW
ACL
Driver Transformer
Flyback Transformer
U901
CRT
XX-XX-XX
XP901
SCN-4Y
XP902
SCN-5Y
XS201
TJC3-5A
XS601
TJC3-2A
XS602
TJC3-2A
XS804
TJC3-3A
XS101
SCN-3Y
XS003
SCN-5Y
XS702
TJC3-5A
XS703
TJC3-4A
for BUS OPEN
XP402
TJC2-5Y
XS402
TJC2-5A
XS401
TJC3-4A
XP502
XS502
TJC1-2A
XS501
TJC1-2A
AC input
AC220V/50cH
SW501
DT1-8A
FU501
T3.15A
RT501
MZ72-14RM
T511
BCK40-28/2385
N501
PC817B
T471
BSC25-T1010A
T431
UU10.5
V432
D1651/D5024
V901
2SC2482
V921
2SC2482
V911
2SC2482
V902
2SA1015
V902
2SA1015
V803
2SC1815Y
V101
2SC1674
V601
2SC1815Y
V704
2SA1015
V701
2SC1815Y
V702
2SC1815
V703
A1015
V202
C1815
V311
2SC1815
V303
2SA940*
V312
2SA1015*
V303
2SC2012*
V431
2SC2383
V513
2SC5287A
V512
2SC3807
2SC2655
V511
2SB764
V592
2SC2673
V591
2SC2673
V593
2SC1815
V501
2SC1815
V502
2SC1815
V701
2SC1815Y
V702
2SC1815
V202
C1815
V902
2SA1015
V902
2SA1015
V901
2SC2482
V921
2SC2482
V911
2SC2482
V902
2SA1015
V902
2SA1015
V902
2SA1015
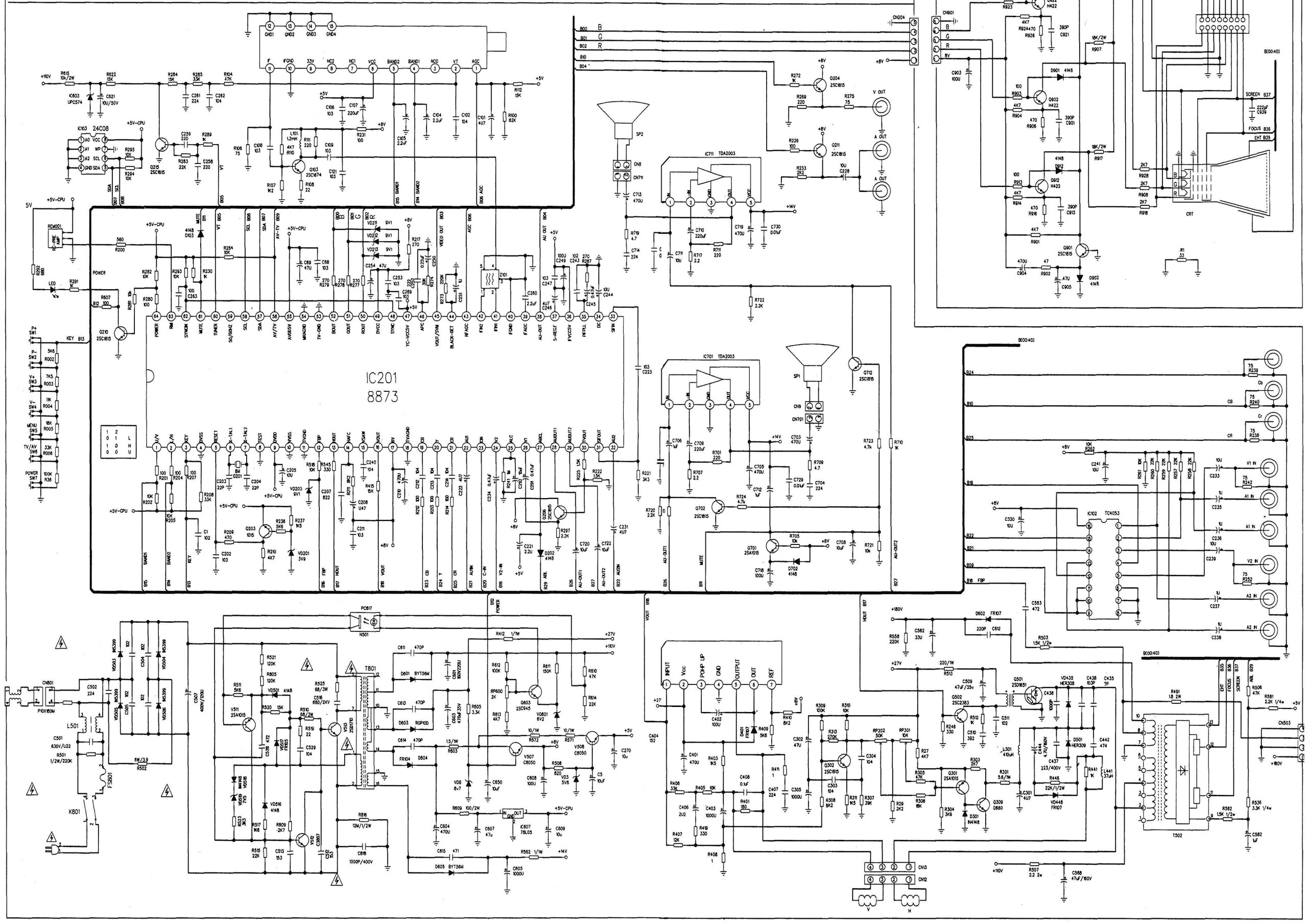
14" 21" COLOR TV BASIC SCHEMATIC DIAGRAM