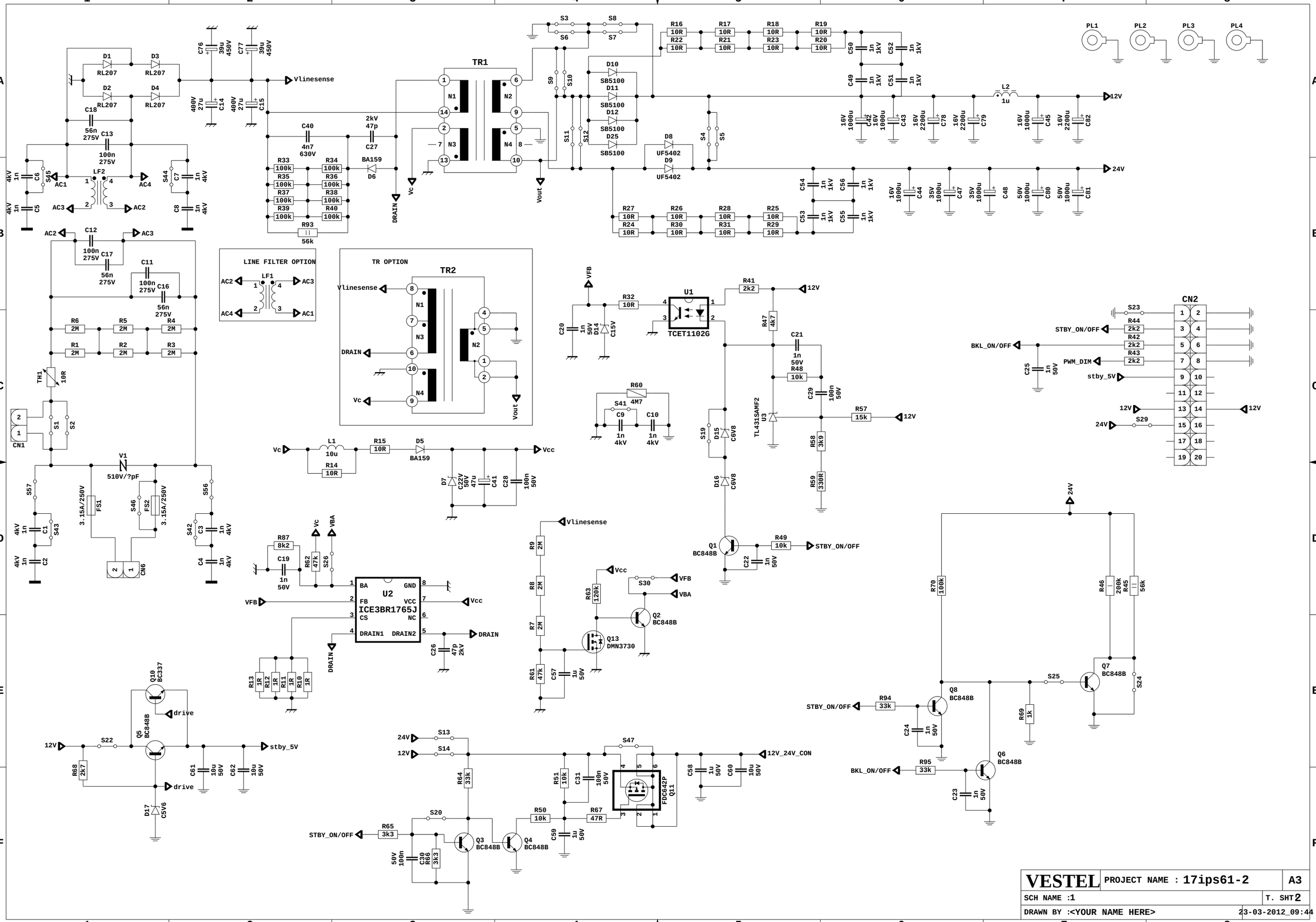

VESTEL	PROJECT NAME : 17ips61-2	A3
SCH NAME :1		T. SHT 2
DRAWN BY :<YOUR NAME HERE>		23-03-2012_09:44

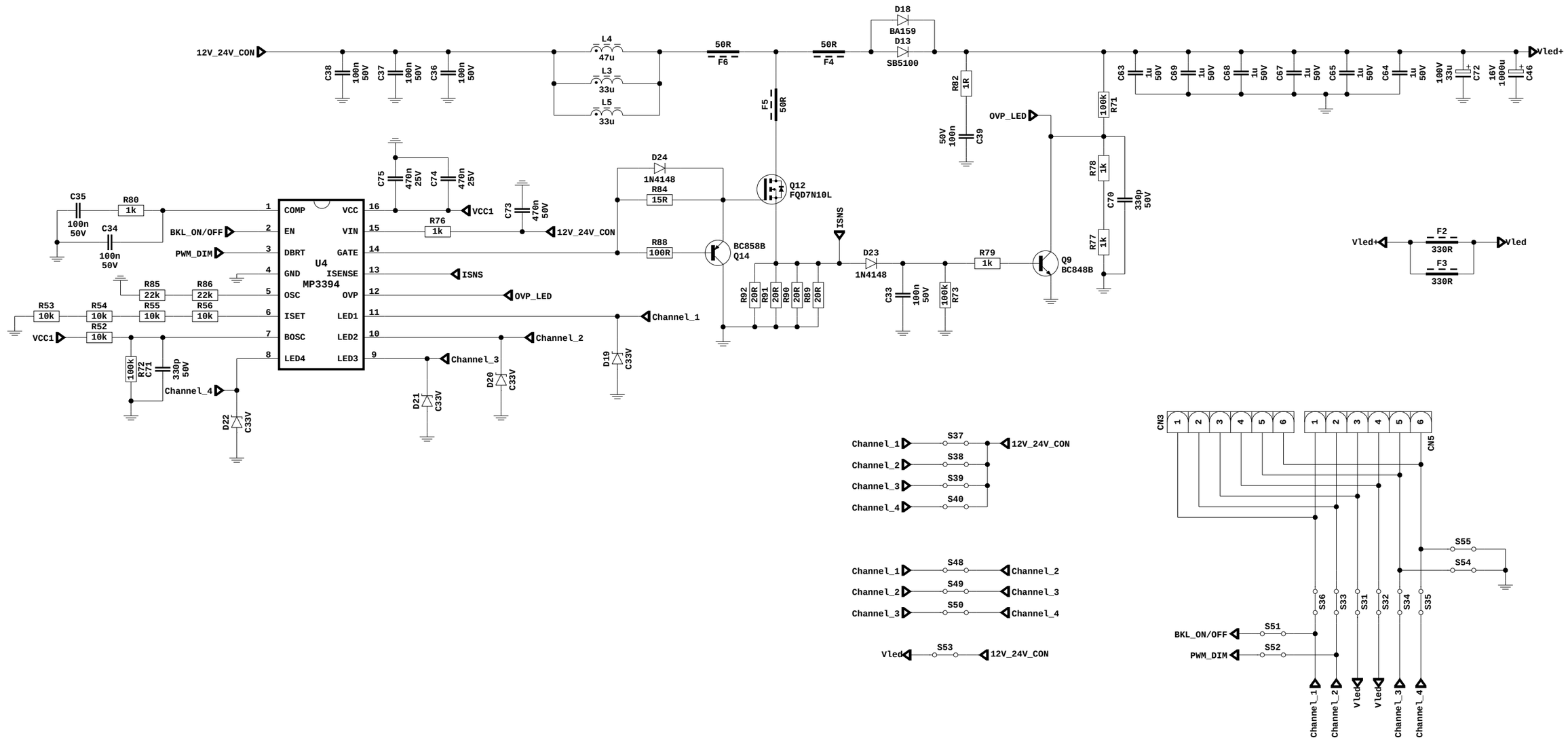

VESTEL	PROJECT NAME : 17ips61-2	A3
SCH NAME :2		T. SHT 2
DRAWN BY :<YOUR NAME HERE>		23-03-2012_10:40