For Schematic Diagram

• Refer to page 4-53 for printed wiring board of ETXNY410E0F board.

ETXNY410E0F BOARD
SW REG
-REF.NO.:3000 SERIES-
XX MARK:NO MOUNT

NO MARK:PB MODE

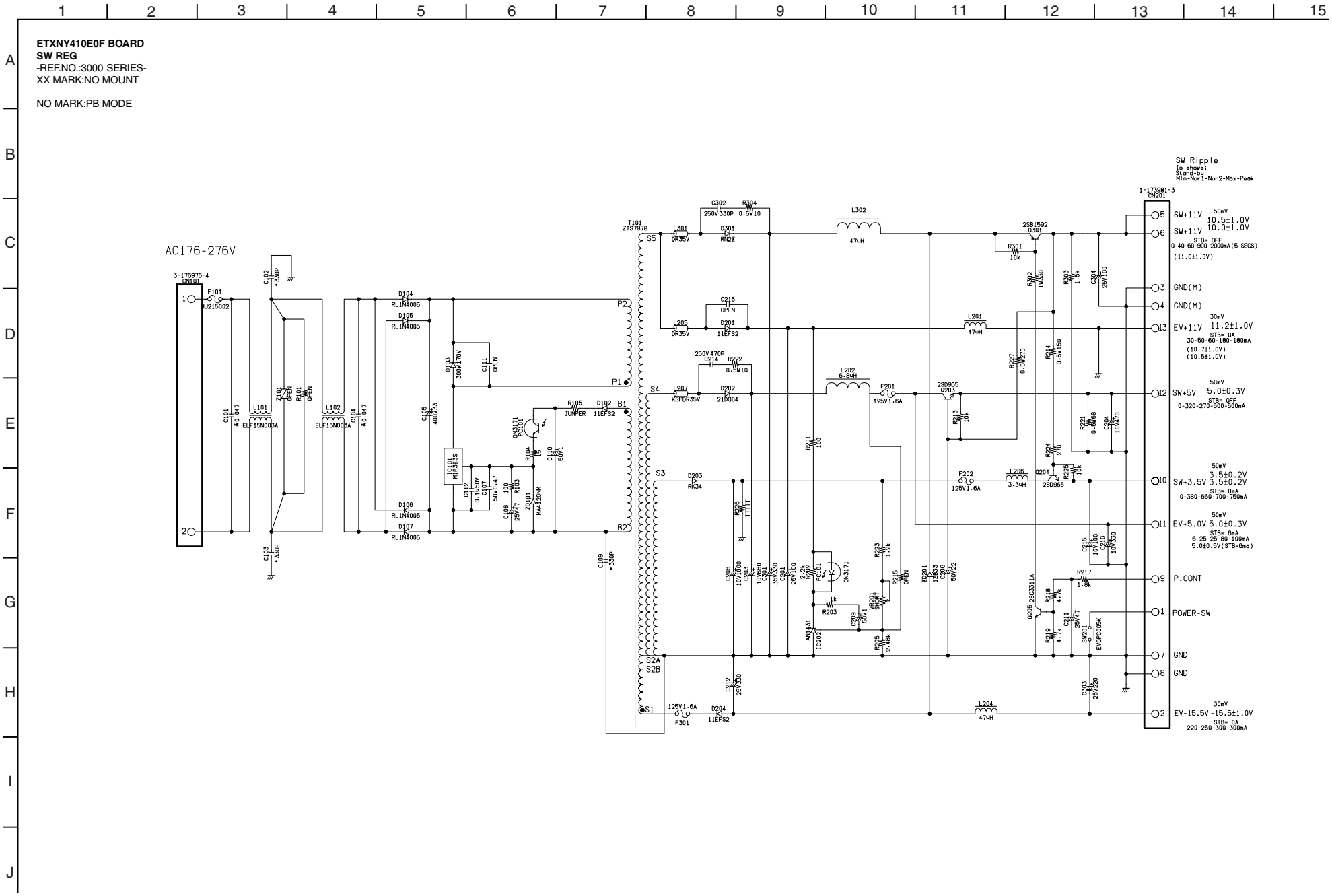

SW REG
POWER BLOCK (ETXNY410E0F)