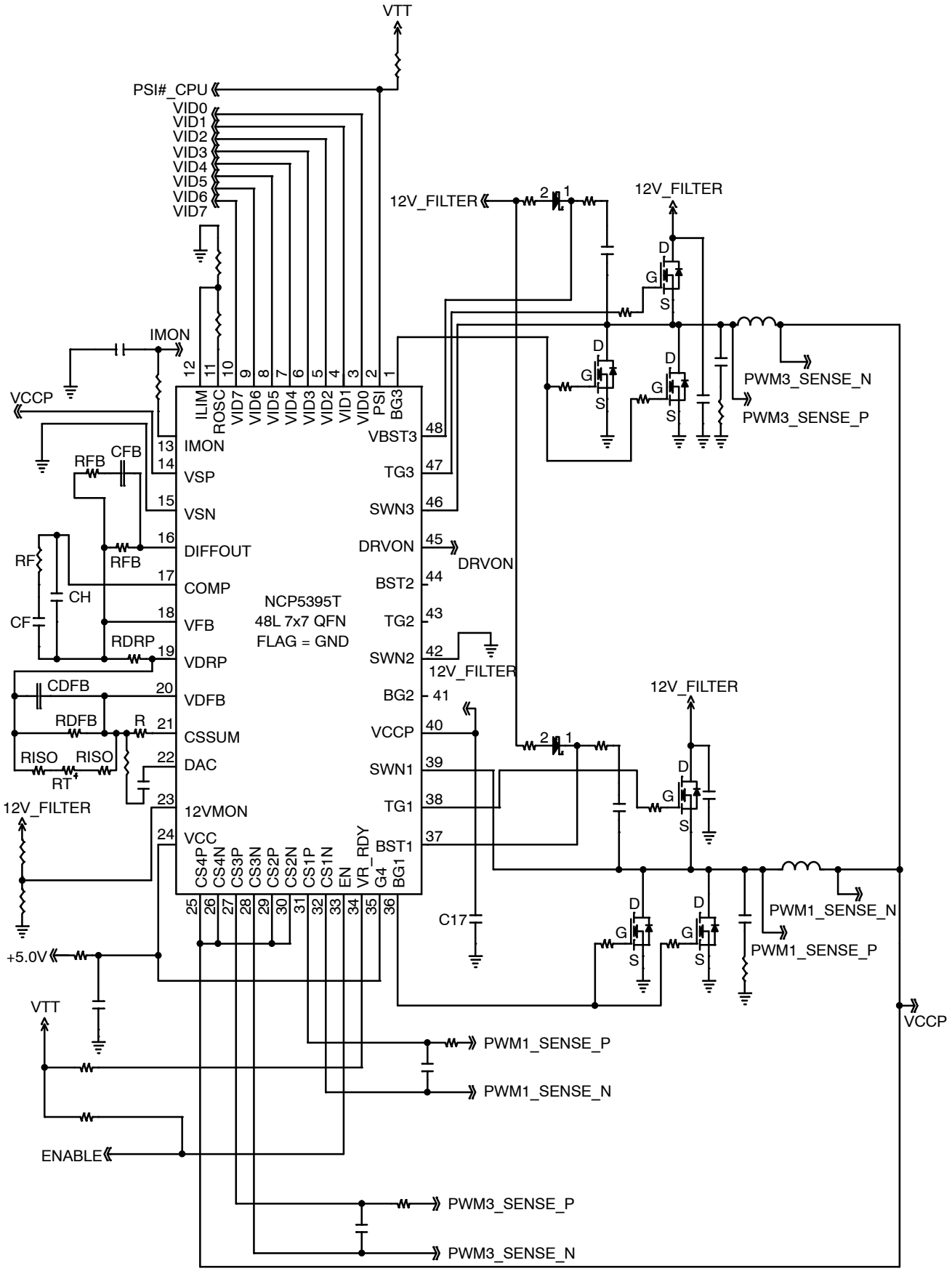

Figure 2. Typical 2 Phase Application