ASUS
Seagate
Magnum

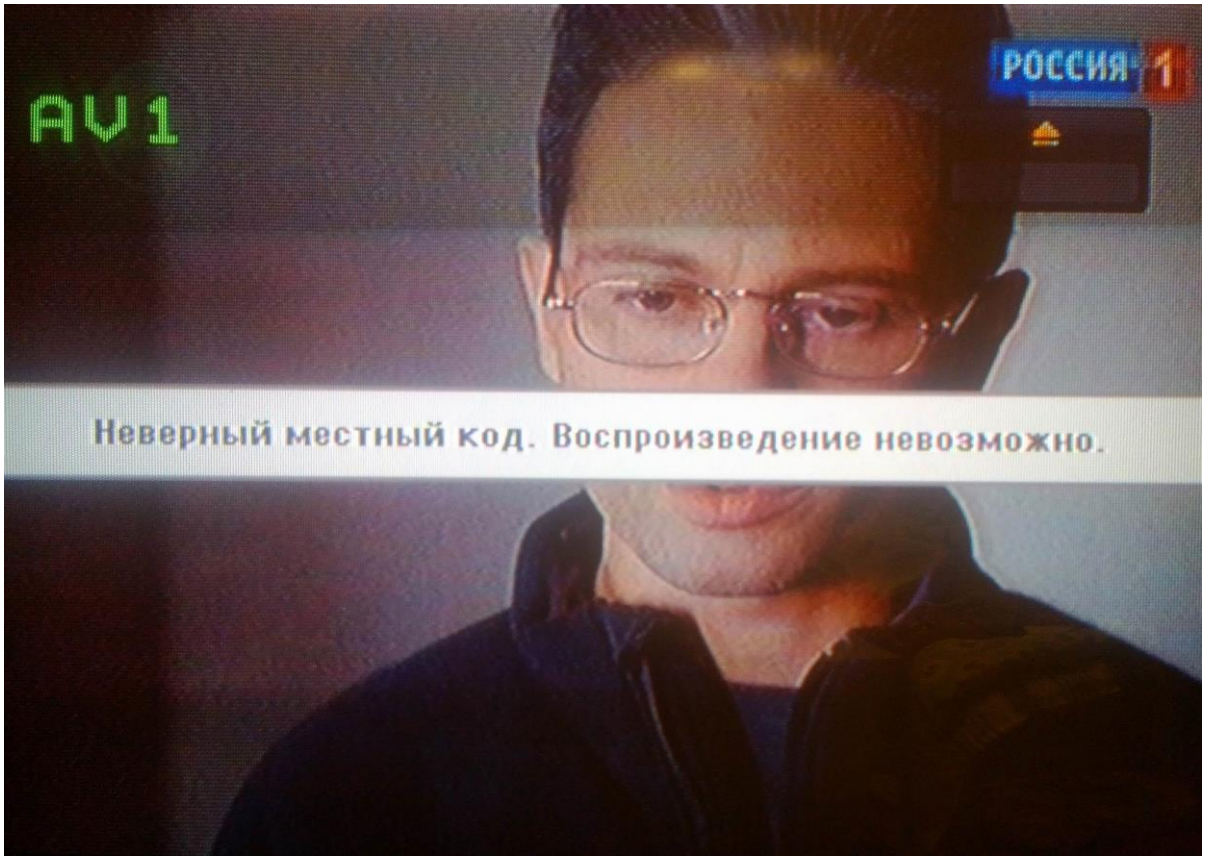
AV1
РОССИЯ 1
Неверный местный код. Воспроизведение невозможно.

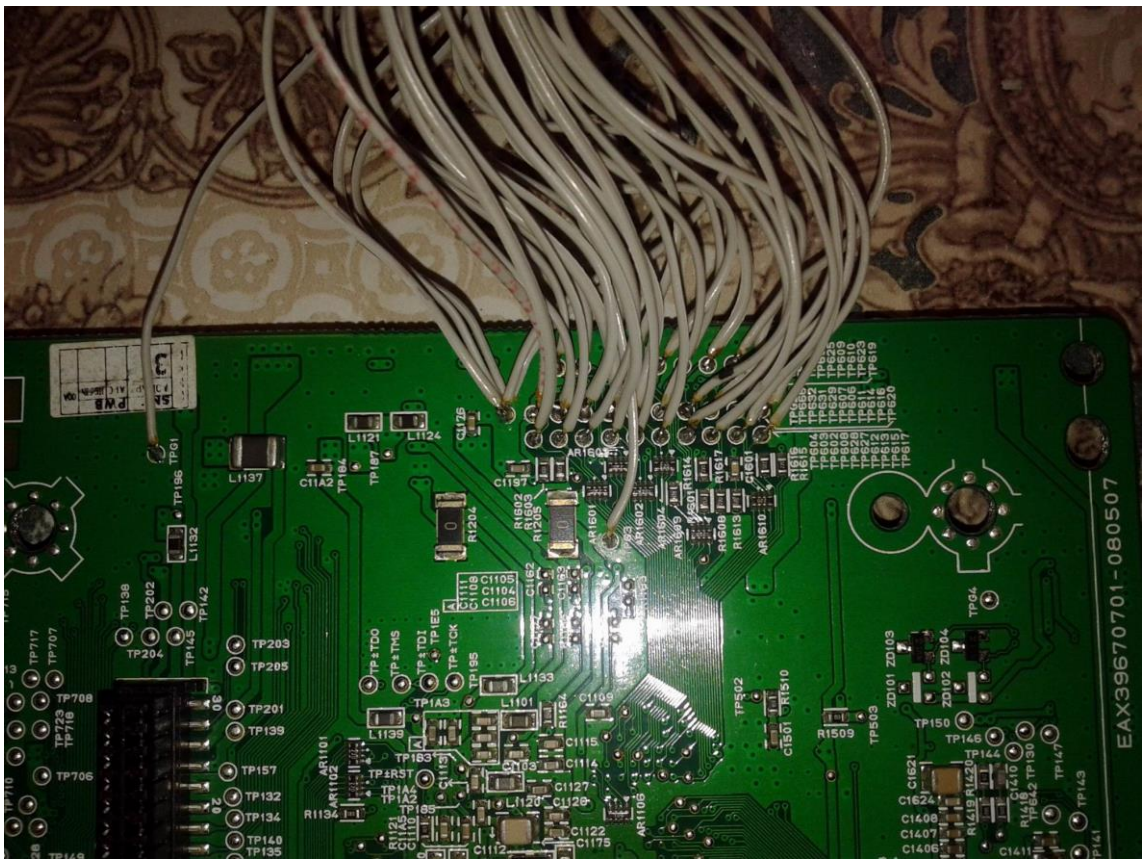
EAX39670701-080507

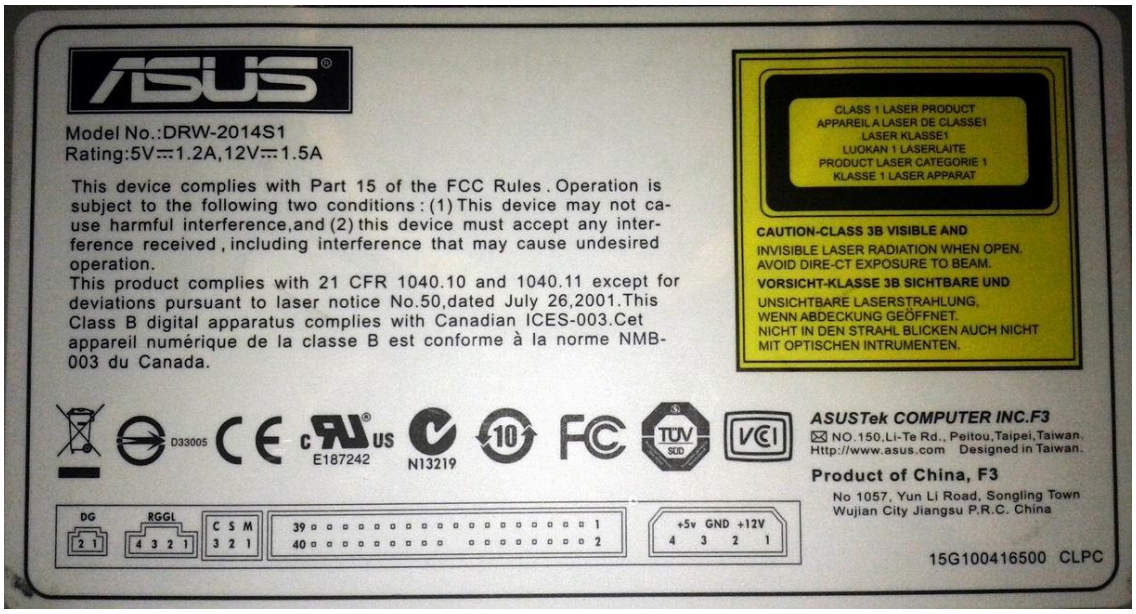
ASUS
Model No.:DRW-2014S1
Rating:5V⎓1.2A,12V⎓1.5A
This device complies with Part 15 of the FCC Rules. Operation is subject to the following two conditions: (1) This device may not cause harmful interference,and (2) this device must accept any interference received, including interference that may cause undesired operation.
This product complies with 21 CFR 1040.10 and 1040.11 except for deviations pursuant to laser notice No.50,dated July 26,2001.This Class B digital apparatus complies with Canadian ICES-003.Cet appareil numérique de la classe B est conforme à la norme NMB-003 du Canada.
CLASS 1 LASER PRODUCT
APPAREIL A LASER DE CLASSE1
LASER KLASSE1
LUOKAN 1 LASERLAITE
PRODUCT LASER CATEGORIE 1
KLASSE 1 LASER APPARAT
CAUTION-CLASS 3B VISIBLE AND
INVISIBLE LASER RADIATION WHEN OPEN.
AVOID DIRE-CT EXPOSURE TO BEAM.
VORSICHT-KLASSE 3B SICHTBARE UND
UNSICHTBARE LASERSTRAHLUNG,
WENN ABDECKUNG GEÖFFNET.
NICHT IN DEN STRAHL BLICKEN AUCH NICHT
MIT OPTISCHEN INTRUMENTEN.
D33005
E187242
N13219
ASUSTek COMPUTER INC.F3
NO.150,Li-Te Rd., Peitou,Taipei,Taiwan.
Http://www.asus.com Designed in Taiwan.
Product of China, F3
No 1057, Yun Li Road, Songling Town
Wujian City Jiangsu P.R.C. China
DG
RGGL
C S M
+5v GND +12V
15G100416500 CLPC

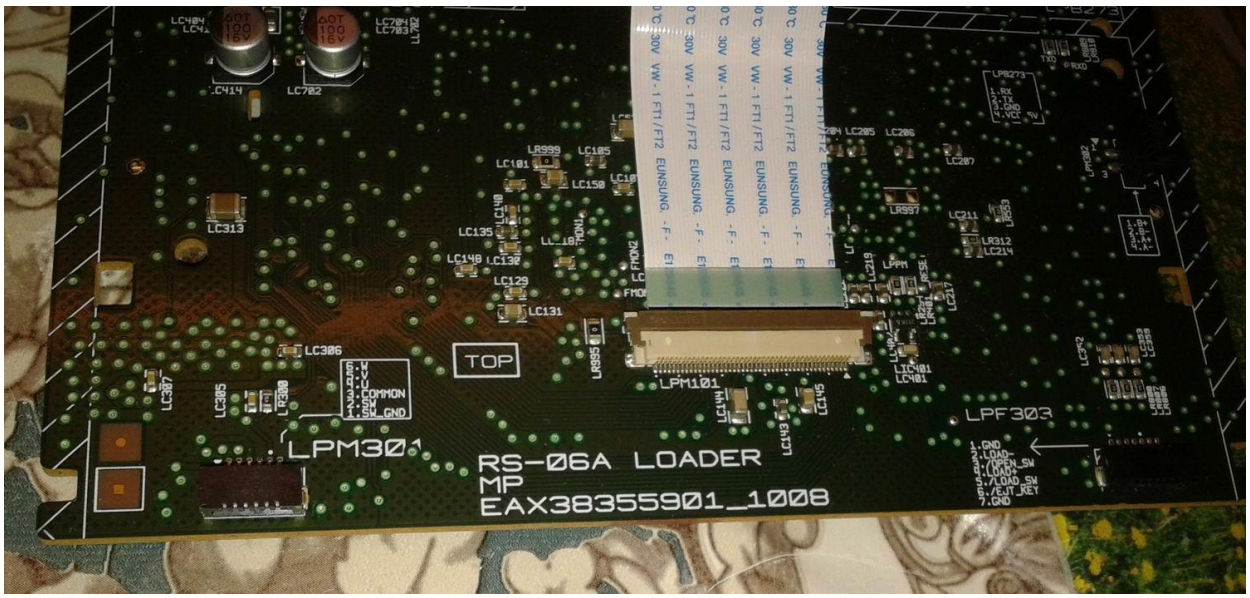
TOP
LPM301
RS-06A LOADER
MP
EAX38355901_1008
LPM101
LPF303

EAX39670701-080507