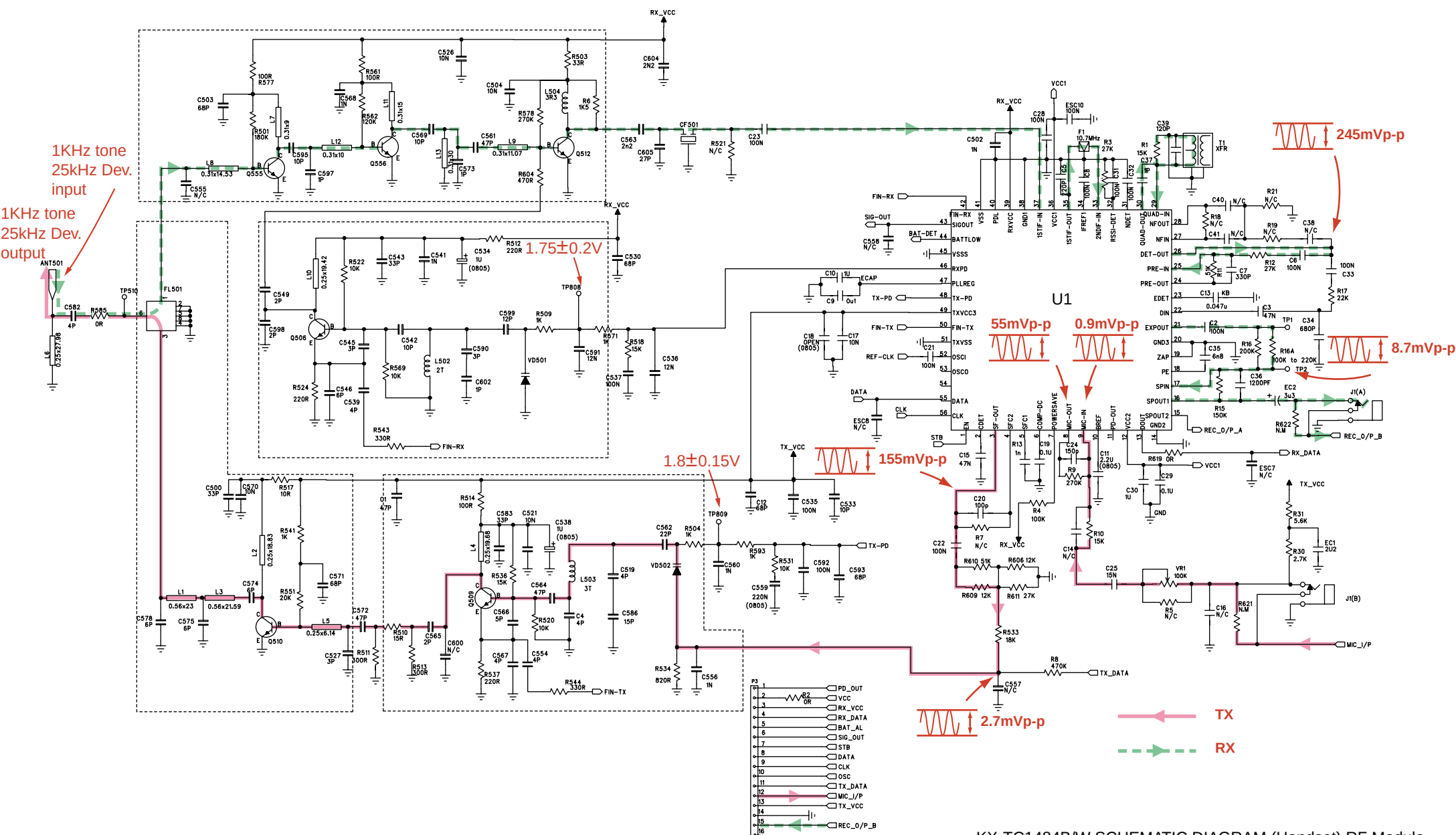

KX-TC1484B/W SCHEMATIC DIAGRAM (Handset) RF Module