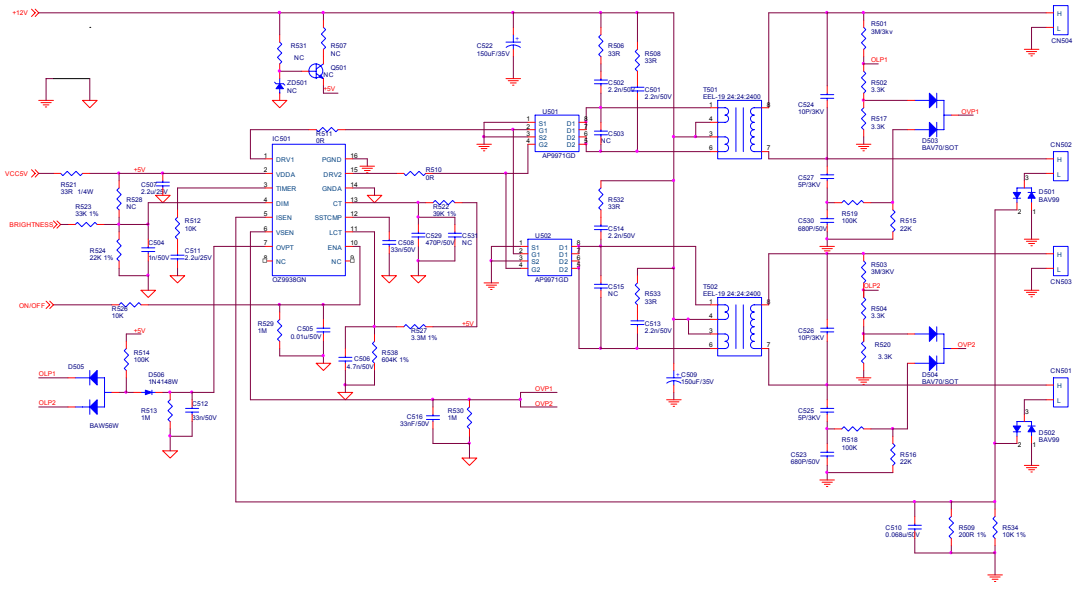

Item	INL	CPT	LPL
R509	200R	200R	220R
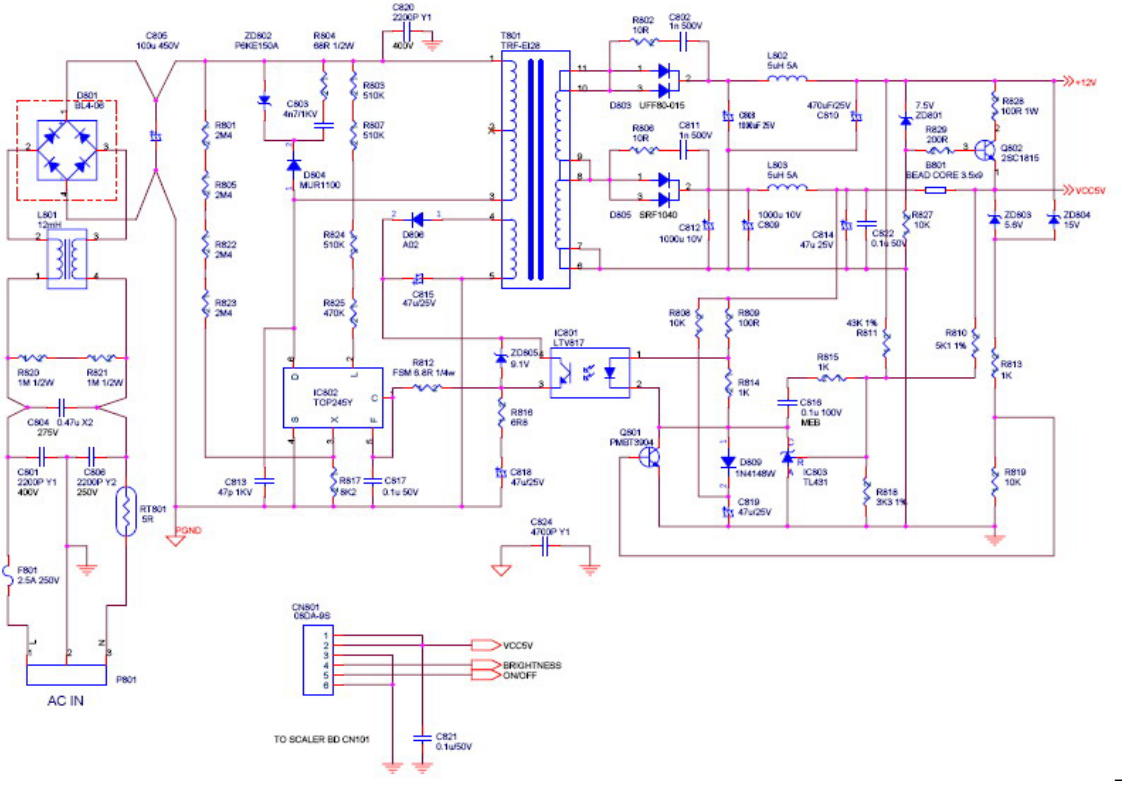
7. Power