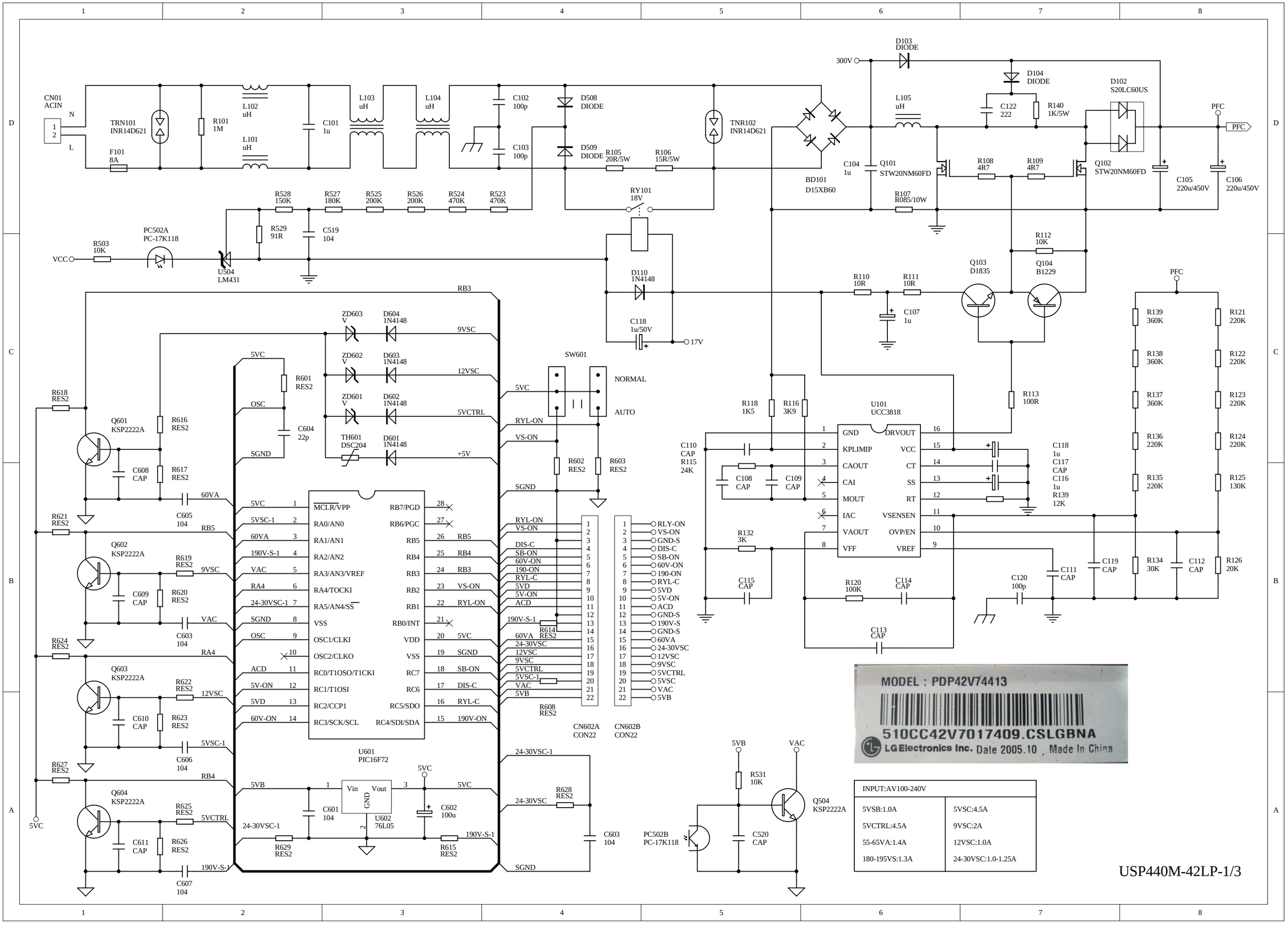
CN01
ACIN
N
L
F101
8A
TRN101
INR14D621
R101
1M
L102
uH
L101
uH
C101
1u
L103
uH
L104
uH
C102
100p
C103
100p
D508
DIODE
D509
DIODE
R105
20R/5W
R106
15R/5W
TNR102
INR14D621
BD101
D15XB60
300V
D103
DIODE
D104
DIODE
L105
uH
C122
222
R140
1K/5W
D102
S20LC60US
PFC
C104
1u
Q101
STW20NM60FD
R108
4R7
R109
4R7
Q102
STW20NM60FD
C105
220u/450V
C106
220u/450V
R107
R085/10W
R528
150K
R527
180K
R525
200K
R526
200K
R524
470K
R523
470K
RY101
18V
R529
91R
C519
104
PC502A
PC-17K118
R503
10K
VCC
U504
LM431
D110
1N4148
C118
1u/50V
17V
R112
10K
Q103
D1835
Q104
B1229
R110
10R
R111
10R
C107
1u
RB3
ZD603
V
D604
1N4148
9VSC
ZD602
V
D603
1N4148
12VSC
ZD601
V
D602
1N4148
5VCTRL
TH601
DSC204
D601
1N4148
+5V
5VC
OSC
SGND
R601
RES2
C604
22p
SW601
NORMAL
AUTO
RYL-ON
VS-ON
R602
RES2
R603
RES2
R618
RES2
Q601
KSP2222A
R616
RES2
C608
CAP
R617
RES2
60VA
C605
104
R621
RES2
RB5
Q602
KSP2222A
R619
RES2
9VSC
C609
CAP
R620
RES2
VAC
C603
104
R624
RES2
RA4
Q603
KSP2222A
R622
RES2
12VSC
C610
CAP
R623
RES2
5VSC-1
C606
104
R627
RES2
RB4
Q604
KSP2222A
R625
RES2
5VCTRL
C611
CAP
R626
RES2
190V-S-1
C607
104
MCLR/VPP
RA0/AN0
RA1/AN1
RA2/AN2
RA3/AN3/VREF
RA4/TOCKI
RA5/AN4/SS
VSS
OSC1/CLKI
OSC2/CLKO
RC0/T1OSO/T1CKI
RC1/T1OSI
RC2/CCP1
RC3/SCK/SCL
RB7/PGD
RB6/PGC
RB5
RB4
RB3
RB2
RB1
RB0/INT
VDD
VSS
RC7
RC6
RC5/SDO
RC4/SDI/SDA
U601
PIC16F72
5VB
Vin
Vout
GND
U602
76L05
C601
104
C602
100u
R629
RES2
R615
RES2
24-30VSC-1
190V-S-1
R628
RES2
24-30VSC
C603
104
SGND
DIS-C
SB-ON
60V-ON
190-ON
RYL-C
5VD
5V-ON
ACD
5V-ON
5VSC-1
VAC
5VB
R614
RES2
R608
RES2
CN602A
CON22
CN602B
CON22
GND-S
190V-S
60VA
24-30VSC
12VSC
9VSC
5VCTRL
5VSC
R118
1K5
R116
3K9
U101
UCC3818
GND
KPLIMIP
CAOUT
CAI
MOUT
IAC
VAOUT
VFF
DRVOUT
VCC
CT
SS
RT
VSENSEN
OVP/EN
VREF
C110
CAP
R115
24K
C108
CAP
C109
CAP
R132
3K
C115
CAP
R120
100K
C114
CAP
C113
CAP
C120
100p
C111
CAP
C118
1u
C117
CAP
C116
1u
R139
12K
R113
100R
R139
360K
R138
360K
R137
360K
R136
220K
R135
220K
R134
30K
R121
220K
R122
220K
R123
220K
R124
220K
R125
130K
R126
20K
C119
CAP
C112
CAP
5VB
VAC
R531
10K
Q504
KSP2222A
PC502B
PC-17K118
C520
CAP
MODEL : PDP42V74413
510CC42V7017409.CSLGBNA
LG Electronics Inc. Date 2005.10 , Made In China
INPUT:AV100-240V
5VSB:1.0A
5VSC:4.5A
5VCTRL:4.5A
9VSC:2A
55-65VA:1.4A
12VSC:1.0A
180-195VS:1.3A
24-30VSC:1.0-1.25A
USP440M-42LP-1/3

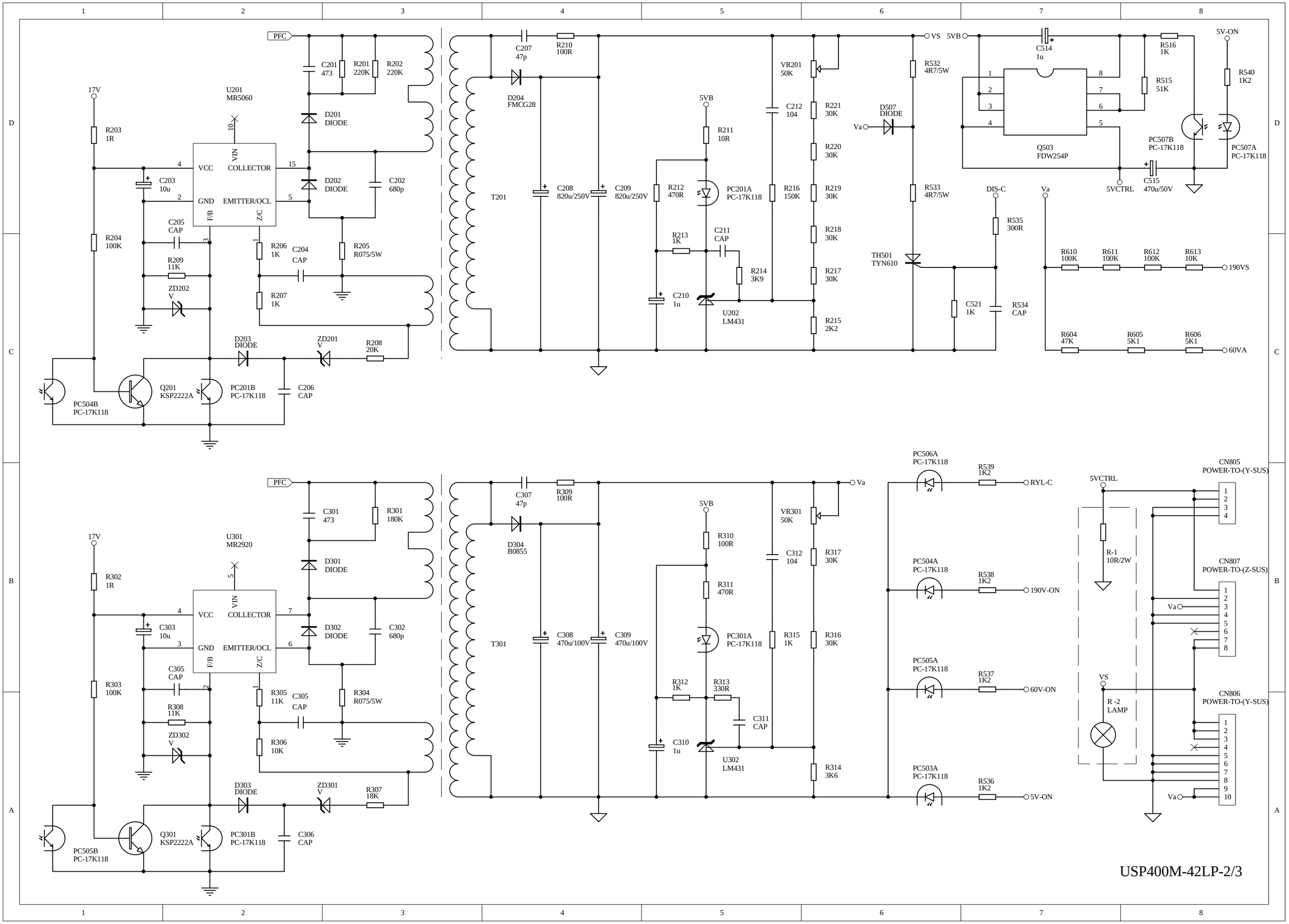
PFC
17V
U201
MR5060
R203
1R
R204
100K
C203
10u
C205
CAP
R209
11K
ZD202
V
VCC
COLLECTOR
VIN
GND
EMITTER/OCL
F/B
Z/C
C201
473
R201
220K
R202
220K
D201
DIODE
D202
DIODE
C202
680p
R206
1K
C204
CAP
R205
R075/5W
R207
1K
D203
DIODE
ZD201
V
R208
20K
PC504B
PC-17K118
Q201
KSP2222A
PC201B
PC-17K118
C206
CAP
C207
47p
R210
100R
D204
FMCG28
T201
C208
820u/250V
C209
820u/250V
5VB
R211
10R
R212
470R
PC201A
PC-17K118
R213
1K
C211
CAP
R214
3K9
C210
1u
U202
LM431
VR201
50K
C212
104
R216
150K
R221
30K
R220
30K
R219
30K
R218
30K
R217
30K
R215
2K2
VS
5VB
R532
4R7/5W
D507
DIODE
Va
R533
4R7/5W
TH501
TYN610
C521
1K
DIS-C
R535
300R
C534
CAP
C514
1u
Q503
FDW254P
R516
1K
R515
51K
PC507B
PC-17K118
C515
470u/50V
5VCTRL
5V-ON
R540
1K2
PC507A
PC-17K118
R610
100K
R611
100K
R612
100K
R613
10K
190VS
R604
47K
R605
5K1
R606
5K1
60VA
PFC
17V
U301
MR2920
R302
1R
R303
100K
C303
10u
C305
CAP
R308
11K
ZD302
V
VCC
COLLECTOR
VIN
GND
EMITTER/OCL
F/B
Z/C
C301
473
R301
180K
D301
DIODE
D302
DIODE
C302
680p
R305
11K
C305
CAP
R304
R075/5W
R306
10K
D303
DIODE
ZD301
V
R307
18K
PC505B
PC-17K118
Q301
KSP2222A
PC301B
PC-17K118
C306
CAP
C307
47p
R309
100R
D304
B0855
T301
C308
470u/100V
C309
470u/100V
5VB
R310
100R
R311
470R
PC301A
PC-17K118
R312
1K
R313
330R
C311
CAP
C310
1u
U302
LM431
VR301
50K
C312
104
R315
1K
R317
30K
R316
30K
R314
3K6
Va
PC506A
PC-17K118
R539
1K2
RYL-C
PC504A
PC-17K118
R538
1K2
190V-ON
PC505A
PC-17K118
R537
1K2
60V-ON
PC503A
PC-17K118
R536
1K2
5V-ON
5VCTRL
R-1
10R/2W
VS
R -2
LAMP
CN805
POWER-TO-(Y-SUS)
CN807
POWER-TO-(Z-SUS)
CN806
POWER-TO-(Y-SUS)
USP400M-42LP-2/3

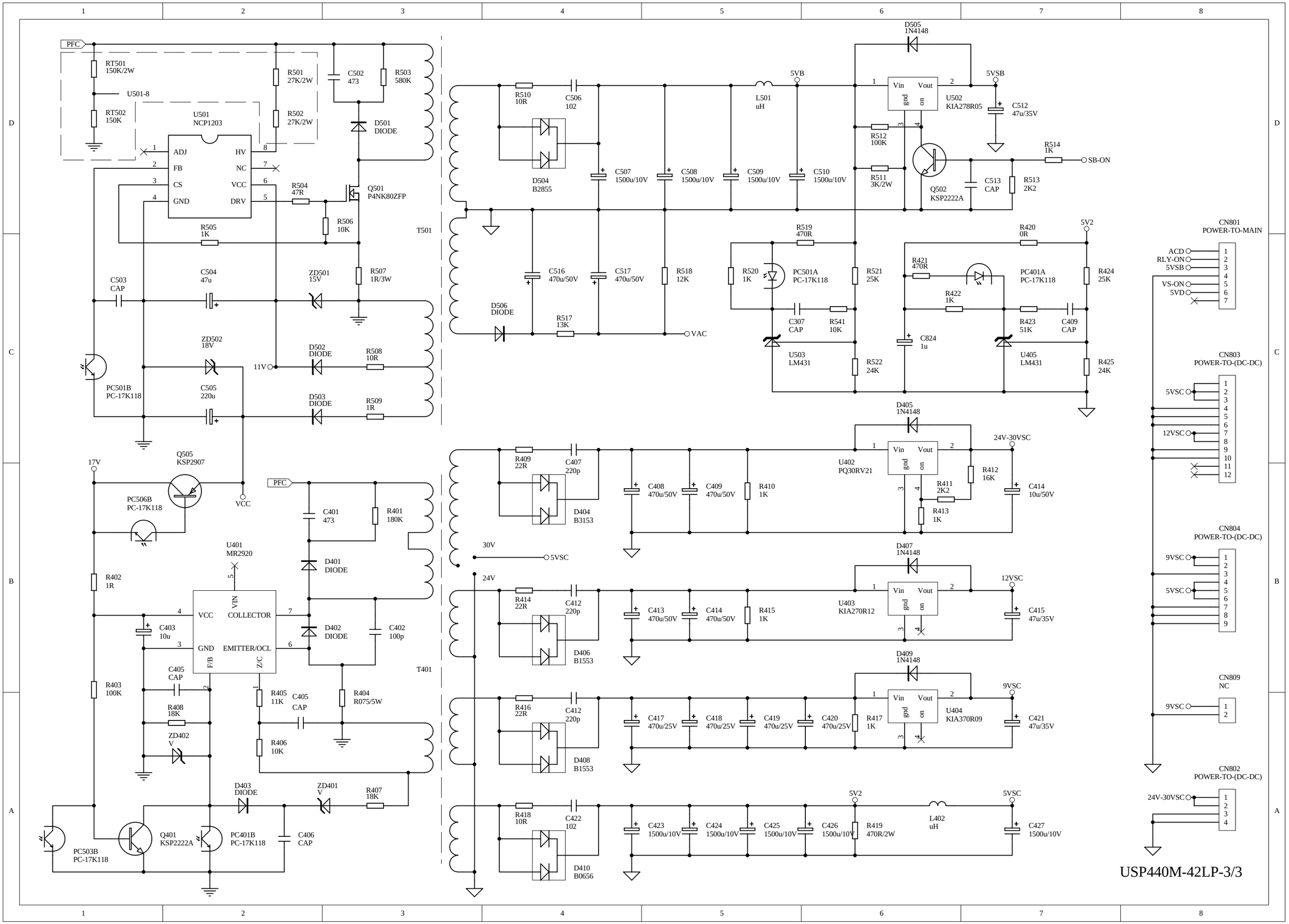
PFC
RT501 150K/2W
RT502 150K
U501-8
U501 NCP1203
ADJ
FB
CS
GND
HV
NC
VCC
DRV
R501 27K/2W
R502 27K/2W
C502 473
R503 580K
D501 DIODE
R504 47R
Q501 P4NK80ZFP
R506 10K
R505 1K
T501
C503 CAP
C504 47u
ZD501 15V
R507 1R/3W
ZD502 18V
D502 DIODE
R508 10R
11V
PC501B PC-17K118
C505 220u
D503 DIODE
R509 1R
Q505 KSP2907
17V
VCC
PC506B PC-17K118
PFC
C401 473
R401 180K
D401 DIODE
U401 MR2920
VIN
VCC
COLLECTOR
GND
EMITTER/OCL
F/B
Z/C
R402 1R
C403 10u
D402 DIODE
C402 100p
T401
R403 100K
C405 CAP
R408 18K
ZD402 V
R405 11K
C405 CAP
R404 R075/5W
R406 10K
D403 DIODE
ZD401 V
R407 18K
PC503B PC-17K118
Q401 KSP2222A
PC401B PC-17K118
C406 CAP
R510 10R
C506 102
D504 B2855
C507 1500u/10V
C508 1500u/10V
C509 1500u/10V
C510 1500u/10V
L501 uH
5VB
D505 1N4148
U502 KIA278R05
Vin
Vout
gnd
on
5VSB
C512 47u/35V
R512 100K
R511 3K/2W
Q502 KSP2222A
C513 CAP
R513 2K2
R514 1K
SB-ON
C516 470u/50V
C517 470u/50V
R518 12K
D506 DIODE
R517 13K
VAC
R519 470R
R520 1K
PC501A PC-17K118
R521 25K
C307 CAP
R541 10K
U503 LM431
R522 24K
R420 0R
5V2
R421 470R
PC401A PC-17K118
R424 25K
R422 1K
R423 51K
C409 CAP
C824 1u
U405 LM431
R425 24K
CN801 POWER-TO-MAIN
ACD
RLY-ON
5VSB
VS-ON
5VD
CN803 POWER-TO-(DC-DC)
5VSC
12VSC
CN804 POWER-TO-(DC-DC)
9VSC
5VSC
CN809 NC
9VSC
CN802 POWER-TO-(DC-DC)
24V-30VSC
D405 1N4148
U402 PQ30RV21
24V-30VSC
R412 16K
R411 2K2
R413 1K
C414 10u/50V
R409 22R
C407 220p
D404 B3153
C408 470u/50V
C409 470u/50V
R410 1K
30V
5VSC
D407 1N4148
U403 KIA270R12
12VSC
C415 47u/35V
24V
R414 22R
C412 220p
D406 B1553
C413 470u/50V
C414 470u/50V
R415 1K
D409 1N4148
U404 KIA370R09
9VSC
C421 47u/35V
R416 22R
C412 220p
D408 B1553
C417 470u/25V
C418 470u/25V
C419 470u/25V
C420 470u/25V
R417 1K
R418 10R
C422 102
D410 B0656
C423 1500u/10V
C424 1500u/10V
C425 1500u/10V
C426 1500u/10V
R419 470R/2W
5V2
L402 uH
5VSC
C427 1500u/10V
USP440M-42LP-3/3