HA-1410T

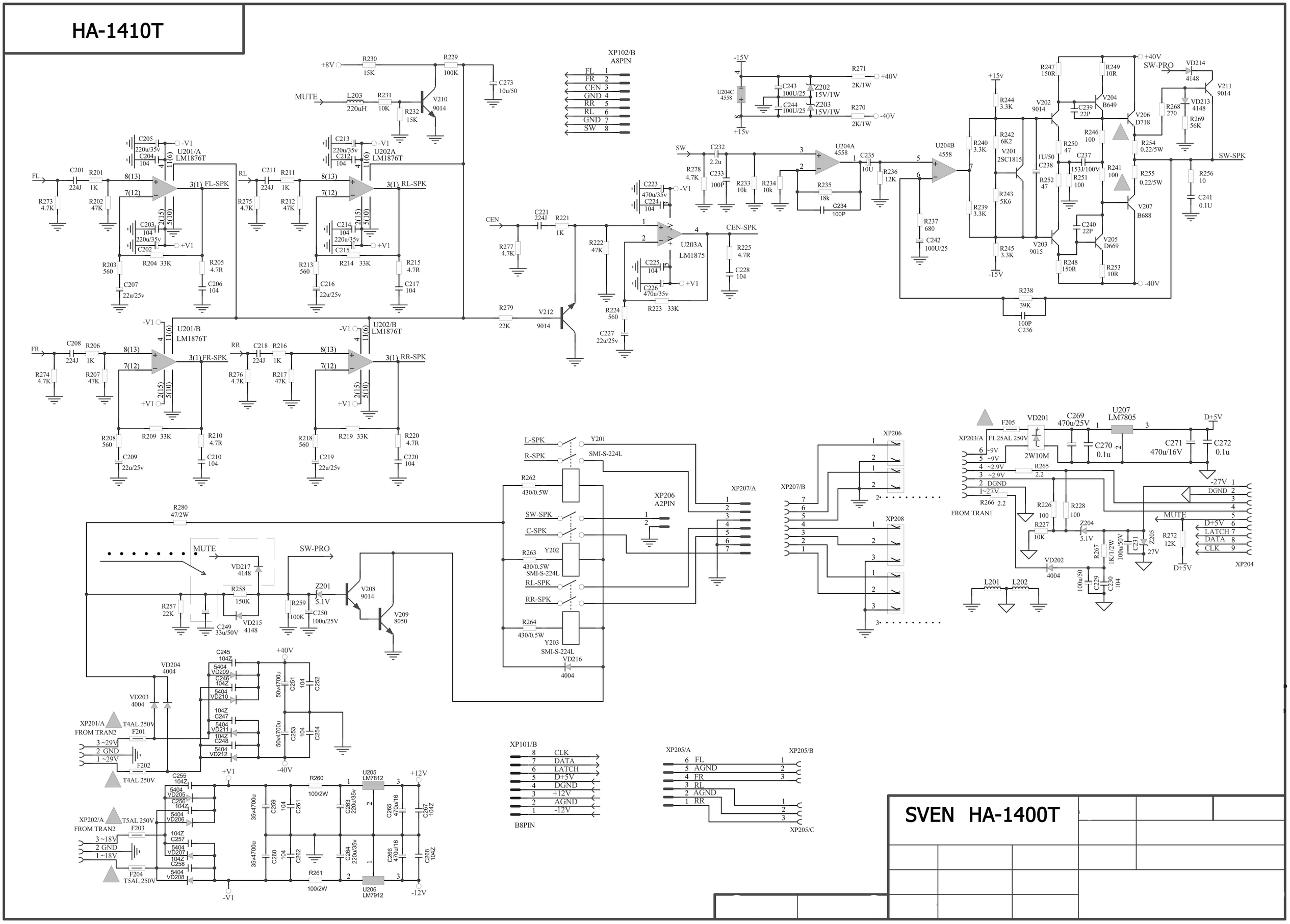

SVEN HA-1400T