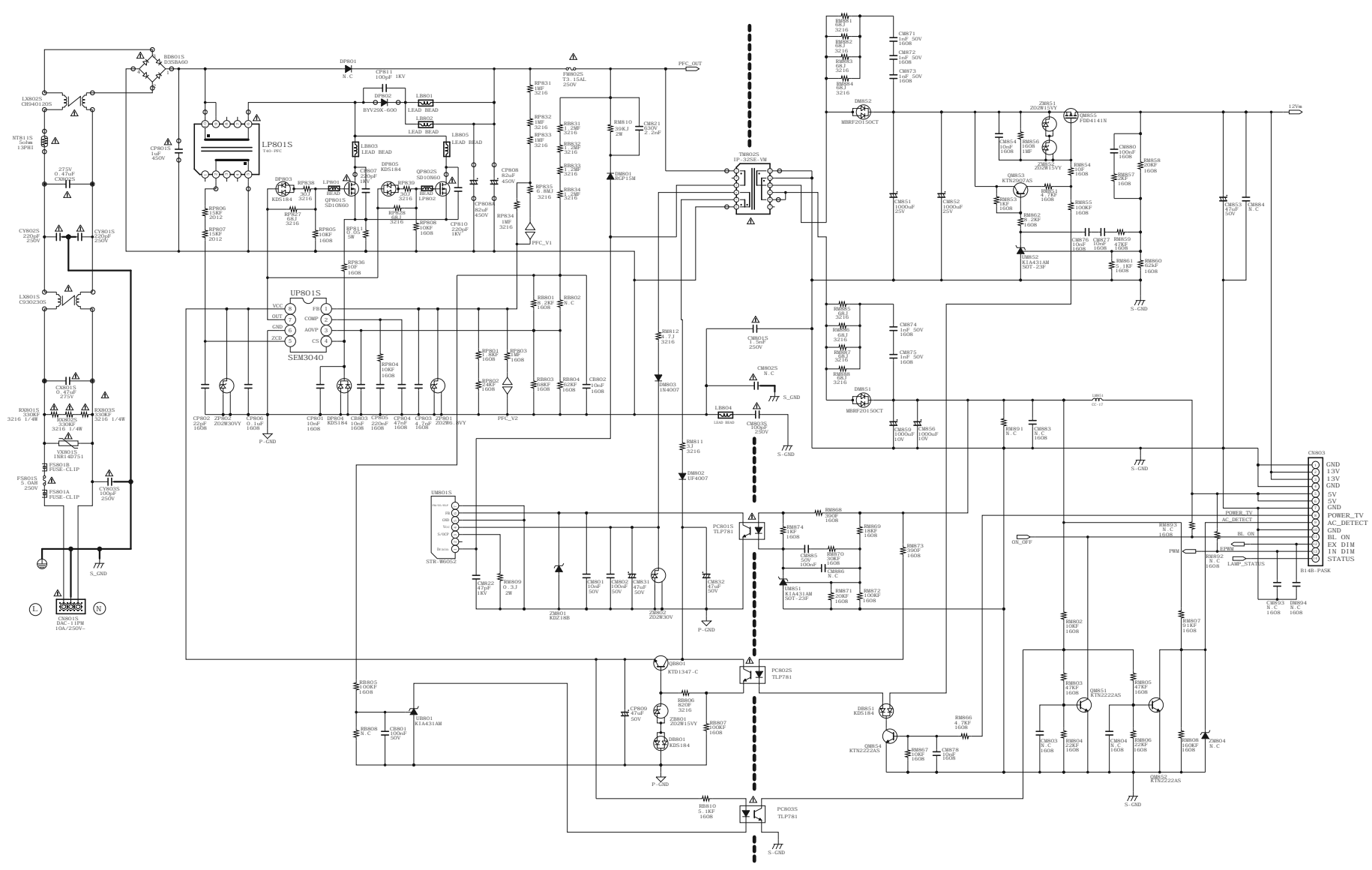
LP801S
T40-PFC
UP801S
SEM3040
VCC
OUT
GND
ZCD
FB
COMP
AOVP
CS
STR-W6052
Drain
PFC_OUT
PFC_V1
PFC_V2
P-GND
S-GND
12Vm
CN803
GND
13V
13V
GND
5V
5V
GND
POWER_TV
AC_DETECT
GND
BL ON
EX DIM
IN DIM
STATUS
B14B-PASK
POWER_TV
AC_DETECT
BL_ON
EPWM
LAMP_STATUS
PWM
ON_OFF
CN801S
DAC-11PM
10A/250V~
L
N

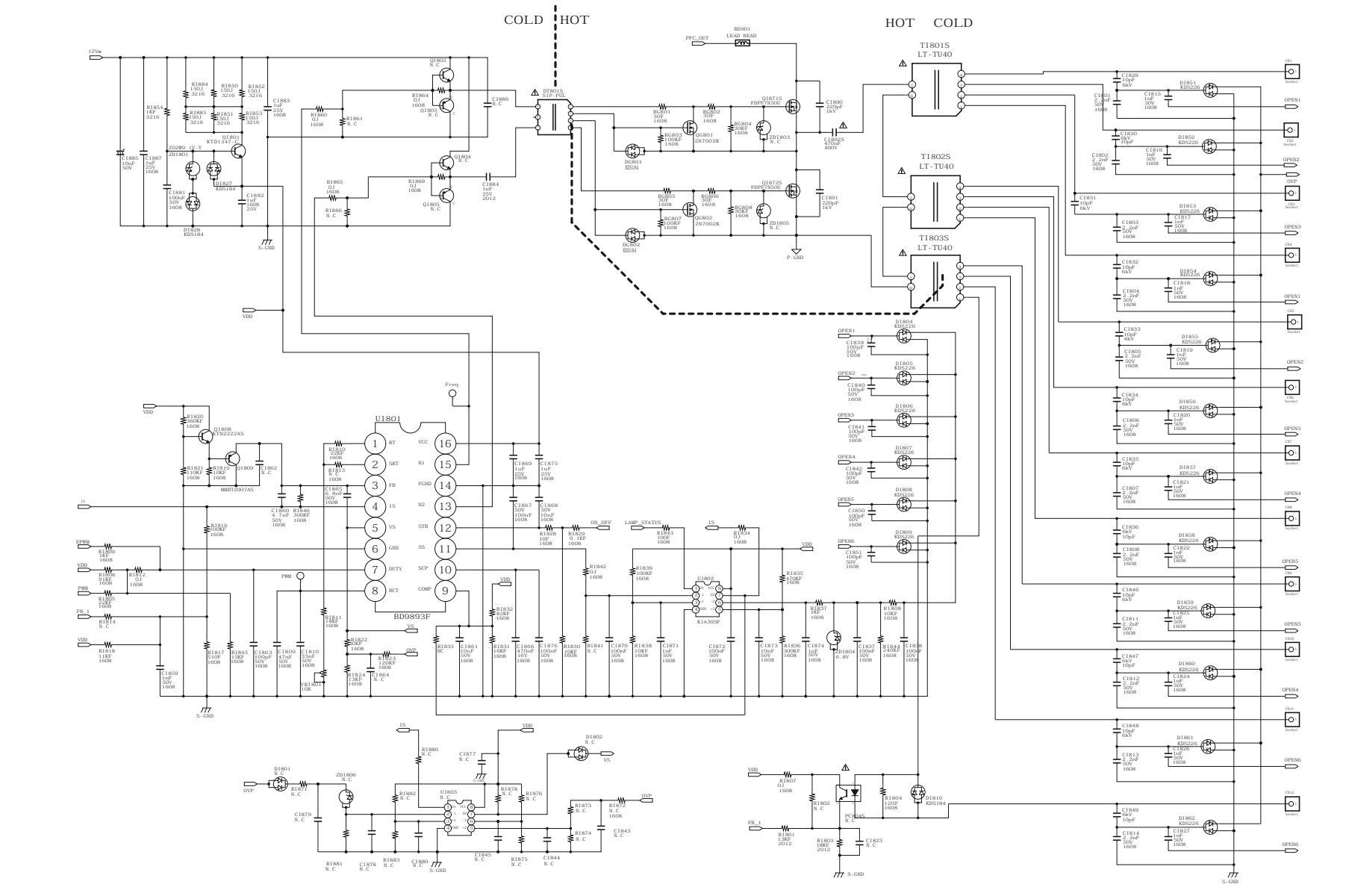
COLD
HOT
HOT
COLD
12Vm
PFC_OUT
BD901
LEAD BEAD
DT8015
SIP-PUL
T1801S
LT-TU40
T1802S
LT-TU40
T1803S
LT-TU40
Q1715
FDPF7650U
Q1725
FDPF7650U
Q1802
N.C
Q1803
N.C
Q1804
N.C
Q1805
N.C
Q1801
KTD1347
Q1827
KDS184
D1828
KDS184
ZD801
ZD806
N.C
ZD1803
N.C
ZD1805
N.C
ZD1804
6.8V
DG801
DG802
2N7002K
S-GND
P-GND
VDD
Freq.
U1801
BD9893F
RT
SRT
FB
IS
VS
GND
DUTY
BCT
VCC
N1
PGND
N2
STB
SS
SCP
COMP
Q1808
MMBT2222AS
Q1809
MMBT2907AS
U1802
KIA393F
ON_OFF
LAMP_STATUS
EPWM
PWM
FB_1
OVP
D1810
KDS184
PC814S
N.C
OPEN1
OPEN2
OPEN3
OPEN4
OPEN5
OPEN6
D1851
KDS226
D1852
KDS226
D1853
KDS226
D1854
KDS226
D1855
KDS226
D1856
KDS226
D1857
KDS226
D1858
KDS226
D1859
KDS226
D1860
KDS226
D1861
KDS226
D1862
KDS226
D1804
KDS226
D1805
KDS226
D1806
KDS226
D1807
KDS226
D1808
KDS226
D1809
KDS226