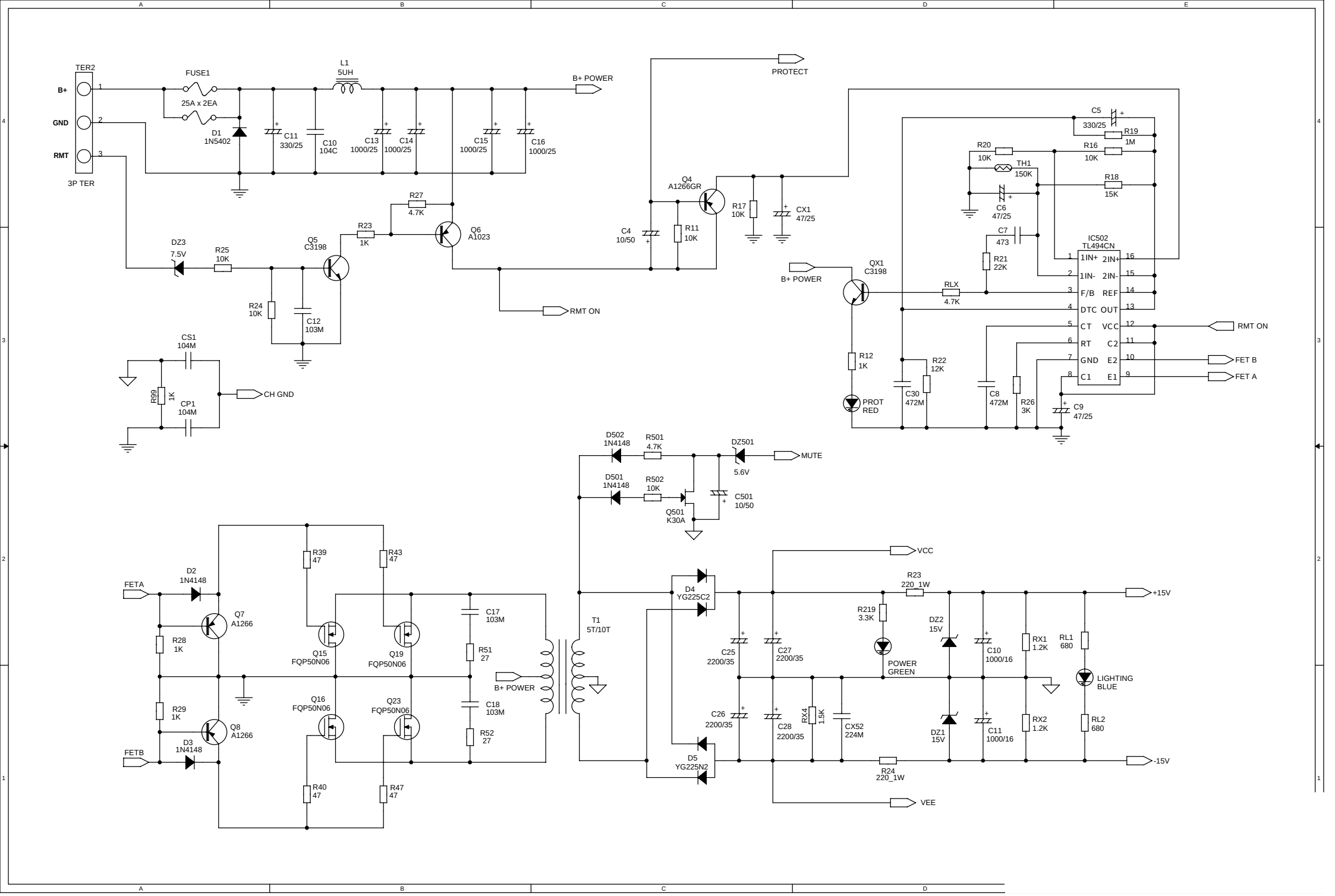
TER2
B+
GND
RMT
3P TER
FUSE1
25A x 2EA
D1
1N5402
C11
330/25
C10
104C
L1
5UH
C13
1000/25
C14
1000/25
C15
1000/25
C16
1000/25
B+ POWER
PROTECT
R27
4.7K
R23
1K
Q6
A1023
Q5
C3198
DZ3
7.5V
R25
10K
R24
10K
C12
103M
RMT ON
Q4
A1266GR
C4
10/50
R11
10K
R17
10K
CX1
47/25
QX1
C3198
B+ POWER
RLX
4.7K
R12
1K
PROT
RED
C5
330/25
R19
1M
R20
10K
R16
10K
TH1
150K
R18
15K
C6
47/25
C7
473
R21
22K
IC502
TL494CN
1IN+
1IN-
F/B
DTC
CT
RT
GND
C1
2IN+
2IN-
REF
OUT
VCC
C2
E2
E1
RMT ON
FET B
FET A
R22
12K
C30
472M
C8
472M
R26
3K
C9
47/25
CS1
104M
R99
1K
CP1
104M
CH GND
D502
1N4148
R501
4.7K
DZ501
5.6V
MUTE
D501
1N4148
R502
10K
Q501
K30A
C501
10/50
FETA
D2
1N4148
Q7
A1266
R28
1K
R29
1K
Q8
A1266
D3
1N4148
FETB
R39
47
R43
47
Q15
FQP50N06
Q19
FQP50N06
Q16
FQP50N06
Q23
FQP50N06
R40
47
R47
47
C17
103M
R51
27
C18
103M
R52
27
B+ POWER
T1
5T/10T
D4
YG225C2
D5
YG225N2
VCC
VEE
R23
220_1W
R24
220_1W
R219
3.3K
POWER
GREEN
C25
2200/35
C27
2200/35
C26
2200/35
C28
2200/35
RX4
1.5K
CX52
224M
DZ2
15V
DZ1
15V
C10
1000/16
C11
1000/16
RX1
1.2K
RX2
1.2K
RL1
680
RL2
680
LIGHTING
BLUE
+15V
-15V

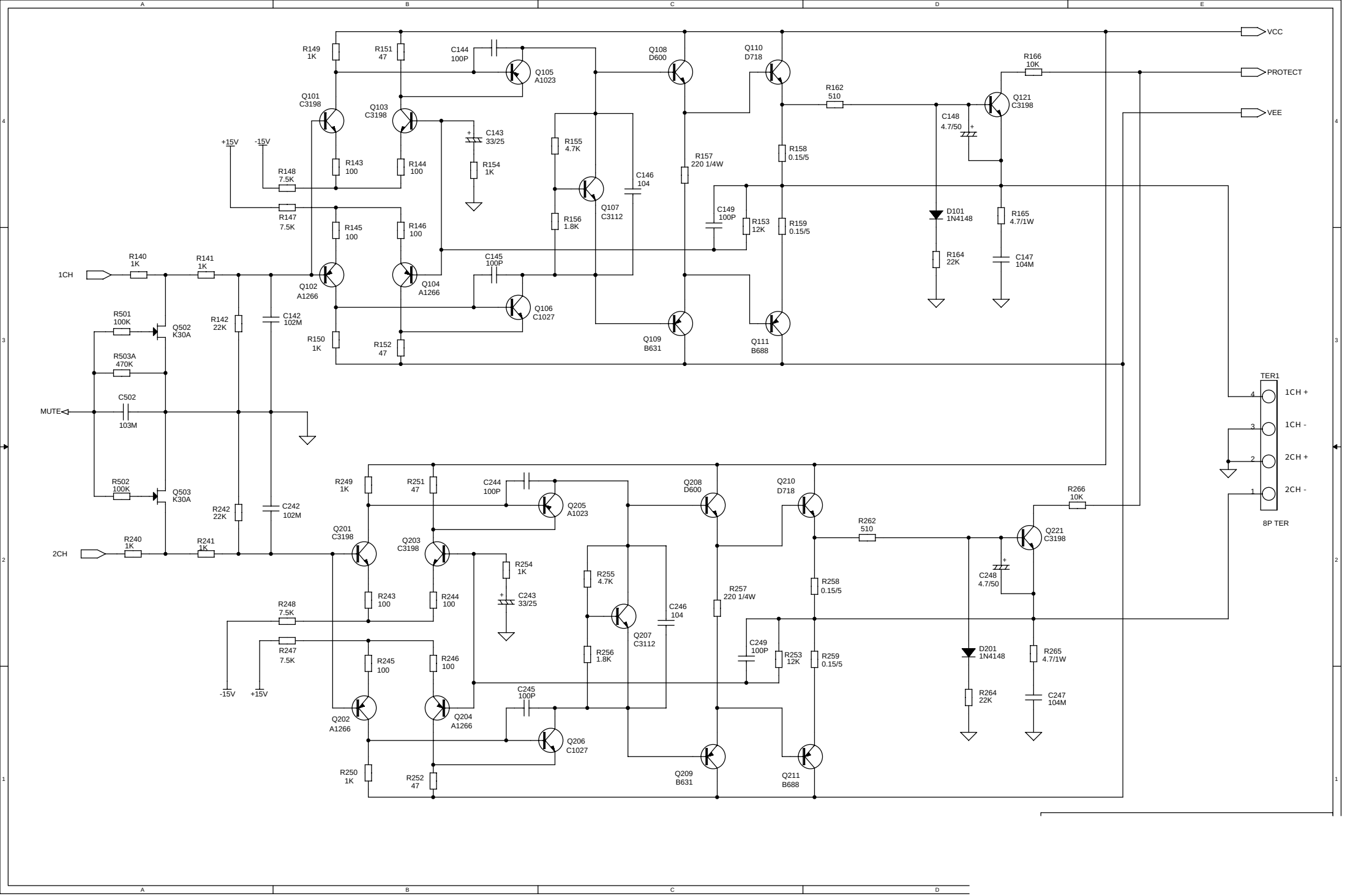
VCC
PROTECT
VEE
R149 1K
R151 47
C144 100P
Q105 A1023
Q108 D600
Q110 D718
R166 10K
R162 510
Q121 C3198
C148 4.7/50
Q101 C3198
Q103 C3198
C143 33/25
R155 4.7K
R158 0.15/5
+15V
-15V
R143 100
R144 100
R154 1K
C146 104
R157 220 1/4W
R148 7.5K
Q107 C3112
R147 7.5K
R156 1.8K
C149 100P
R153 12K
R159 0.15/5
D101 1N4148
R165 4.7/1W
R145 100
R146 100
R164 22K
C147 104M
R140 1K
R141 1K
C145 100P
1CH
Q102 A1266
Q104 A1266
Q106 C1027
R501 100K
Q502 K30A
R142 22K
C142 102M
R150 1K
R152 47
Q109 B631
Q111 B688
R503A 470K
TER1
C502
MUTE
103M
1CH +
1CH -
2CH +
2CH -
8P TER
R502 100K
Q503 K30A
R249 1K
R251 47
C244 100P
Q205 A1023
Q208 D600
Q210 D718
R266 10K
R242 22K
C242 102M
R262 510
Q221 C3198
Q201 C3198
Q203 C3198
R240 1K
R241 1K
2CH
R254 1K
R255 4.7K
R258 0.15/5
C248 4.7/50
R243 100
R244 100
C243 33/25
R257 220 1/4W
C246 104
R248 7.5K
Q207 C3112
R247 7.5K
R256 1.8K
C249 100P
R253 12K
R259 0.15/5
D201 1N4148
R265 4.7/1W
R245 100
R246 100
-15V
+15V
C245 100P
R264 22K
C247 104M
Q202 A1266
Q204 A1266
Q206 C1027
R250 1K
R252 47
Q209 B631
Q211 B688

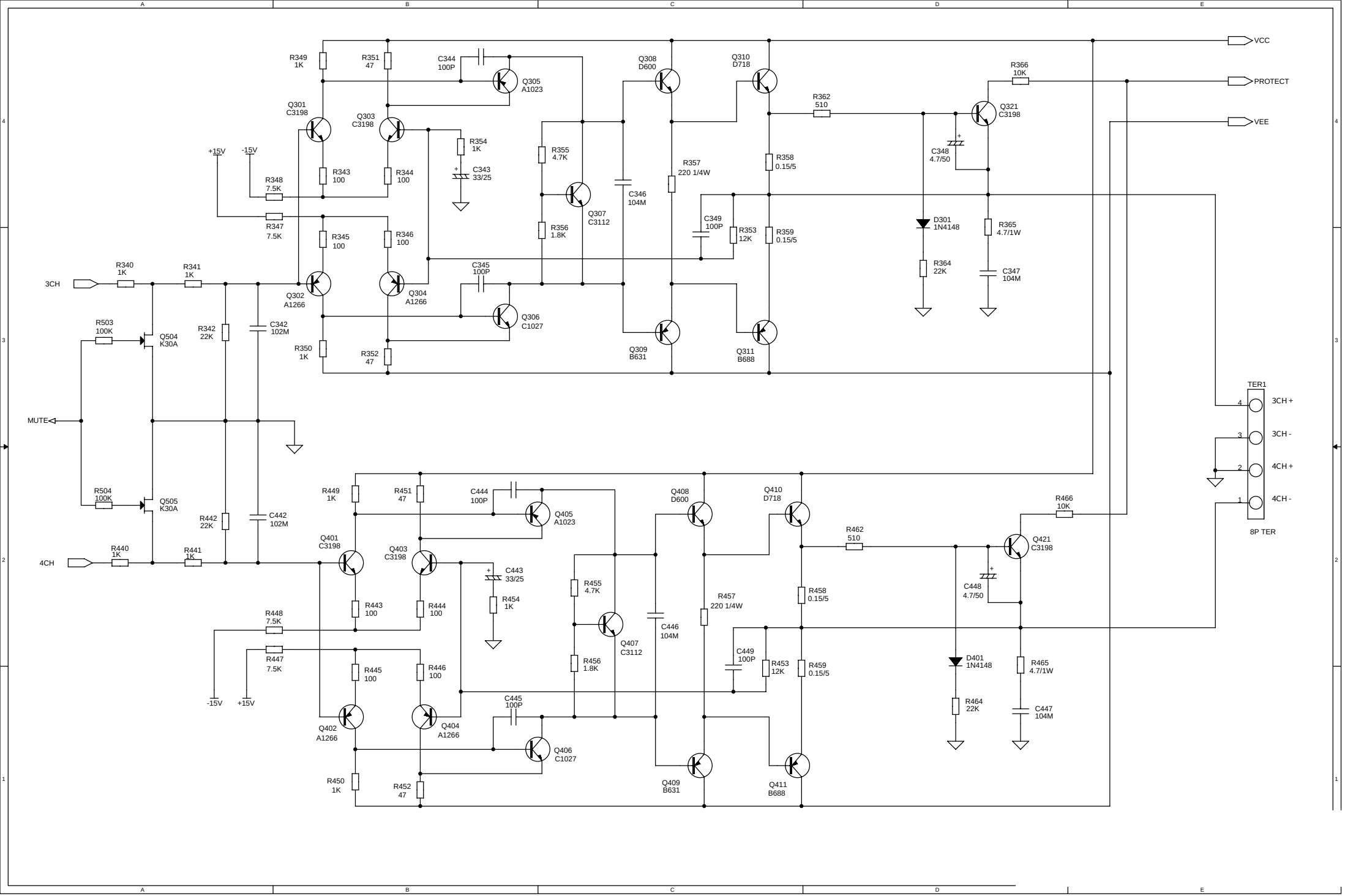
VCC
PROTECT
VEE
3CH
4CH
MUTE
TER1
3CH +
3CH -
4CH +
4CH -
8P TER
R349 1K
R351 47
C344 100P
Q305 A1023
Q308 D600
Q310 D718
R366 10K
R362 510
Q321 C3198
Q301 C3198
Q303 C3198
R354 1K
C343 33/25
R355 4.7K
R357 220 1/4W
R358 0.15/5
C348 4.7/50
+15V
-15V
R348 7.5K
R343 100
R344 100
C346 104M
Q307 C3112
R347 7.5K
R345 100
R346 100
R356 1.8K
C349 100P
R353 12K
R359 0.15/5
D301 1N4148
R365 4.7/1W
R340 1K
R341 1K
C345 100P
R364 22K
C347 104M
Q302 A1266
Q304 A1266
Q306 C1027
R503 100K
Q504 K30A
R342 22K
C342 102M
R350 1K
R352 47
Q309 B631
Q311 B688
R504 100K
Q505 K30A
R442 22K
C442 102M
R449 1K
R451 47
C444 100P
Q405 A1023
Q408 D600
Q410 D718
R466 10K
R462 510
Q421 C3198
R440 1K
R441 1K
Q401 C3198
Q403 C3198
C443 33/25
R455 4.7K
R457 220 1/4W
R458 0.15/5
C448 4.7/50
R454 1K
R443 100
R444 100
R448 7.5K
C446 104M
Q407 C3112
R447 7.5K
R456 1.8K
C449 100P
R453 12K
R459 0.15/5
D401 1N4148
R465 4.7/1W
R445 100
R446 100
C445 100P
R464 22K
C447 104M
Q402 A1266
Q404 A1266
Q406 C1027
R450 1K
R452 47
Q409 B631
Q411 B688

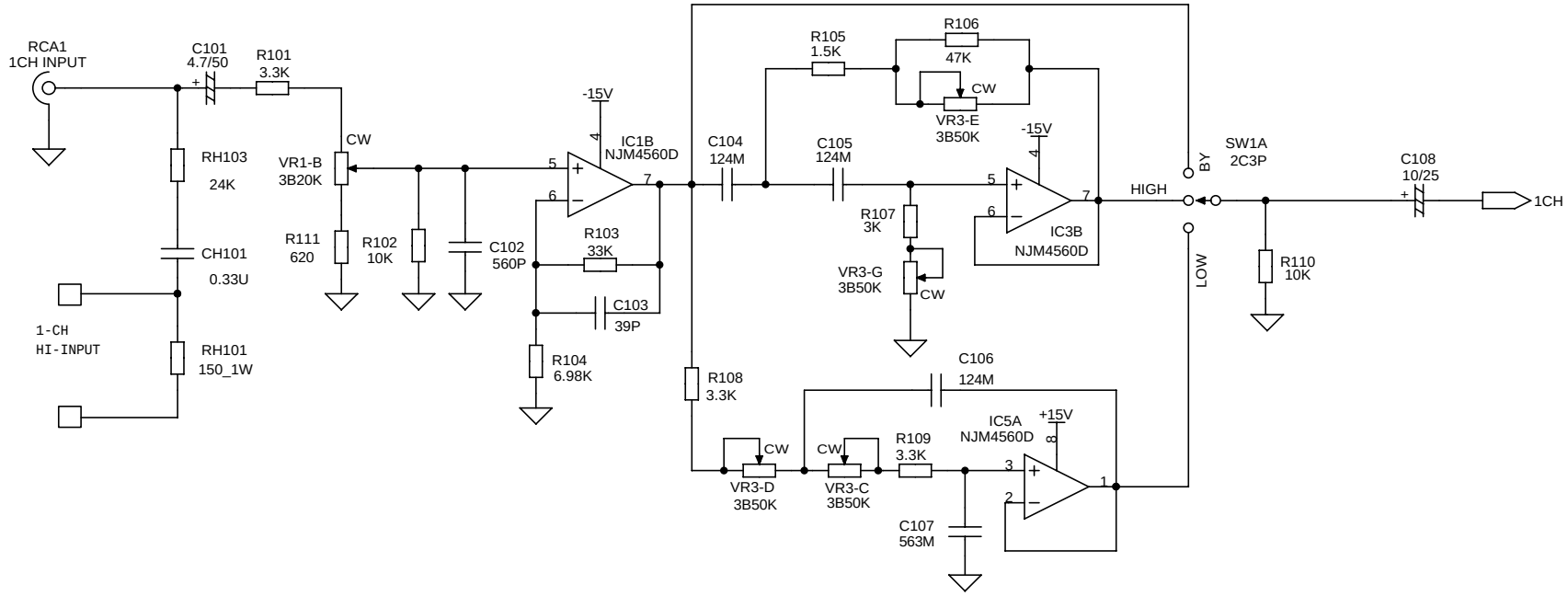
RCA1
1CH INPUT
C101
4.7/50
R101
3.3K
RH103
24K
CH101
0.33U
1-CH
HI-INPUT
RH101
150_1W
VR1-B
3B20K
CW
R111
620
R102
10K
C102
560P
-15V
IC1B
NJM4560D
R103
33K
C103
39P
R104
6.98K
C104
124M
R105
1.5K
R106
47K
VR3-E
3B50K
C105
124M
R107
3K
VR3-G
3B50K
IC3B
NJM4560D
HIGH
BY
LOW
SW1A
2C3P
C108
10/25
1CH
R110
10K
R108
3.3K
C106
124M
IC5A
NJM4560D
+15V
R109
3.3K
VR3-D
3B50K
VR3-C
3B50K
C107
563M

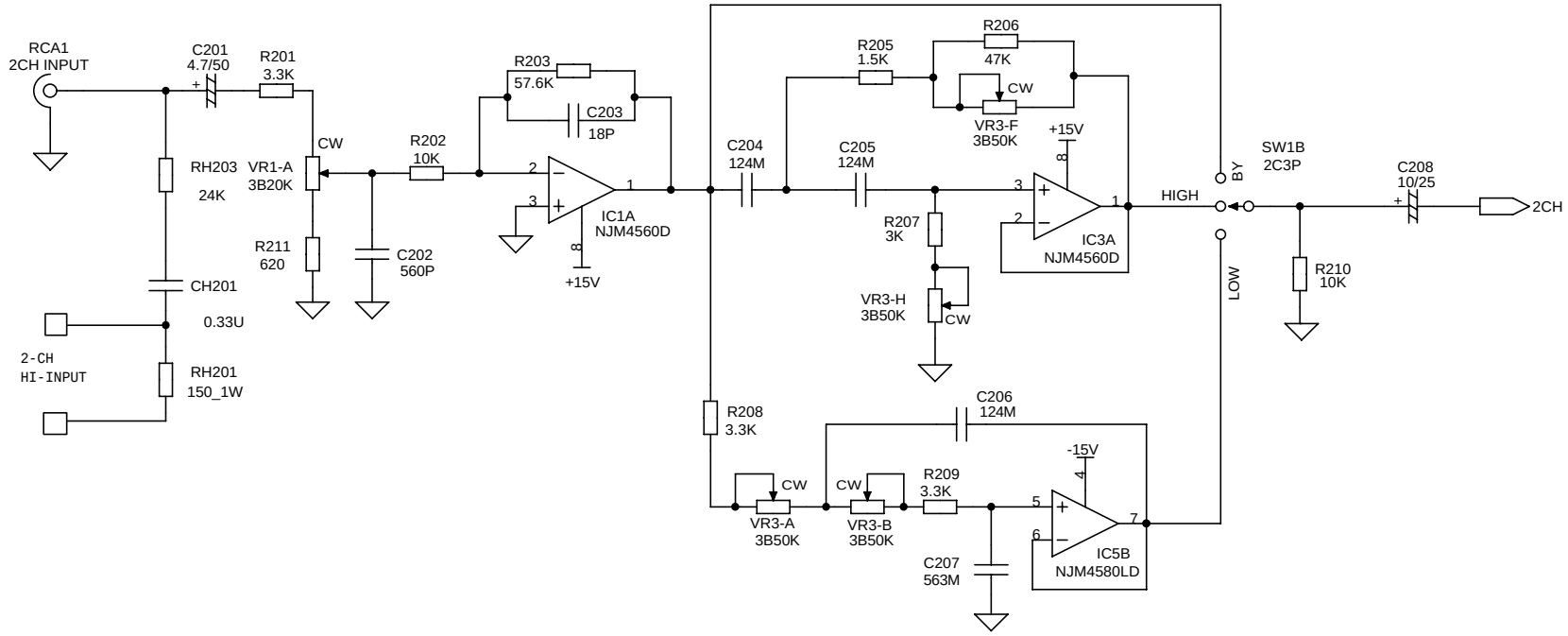
RCA1
2CH INPUT
C201
4.7/50
R201
3.3K
RH203
24K
CH201
0.33U
2-CH
HI-INPUT
RH201
150_1W
VR1-A
3B20K
CW
R211
620
C202
560P
R202
10K
R203
57.6K
C203
18P
IC1A
NJM4560D
+15V
C204
124M
R205
1.5K
R206
47K
VR3-F
3B50K
C205
124M
R207
3K
VR3-H
3B50K
IC3A
NJM4560D
HIGH
BY
LOW
SW1B
2C3P
C208
10/25
2CH
R210
10K
R208
3.3K
C206
124M
-15V
R209
3.3K
VR3-A
3B50K
VR3-B
3B50K
C207
563M
IC5B
NJM4580LD

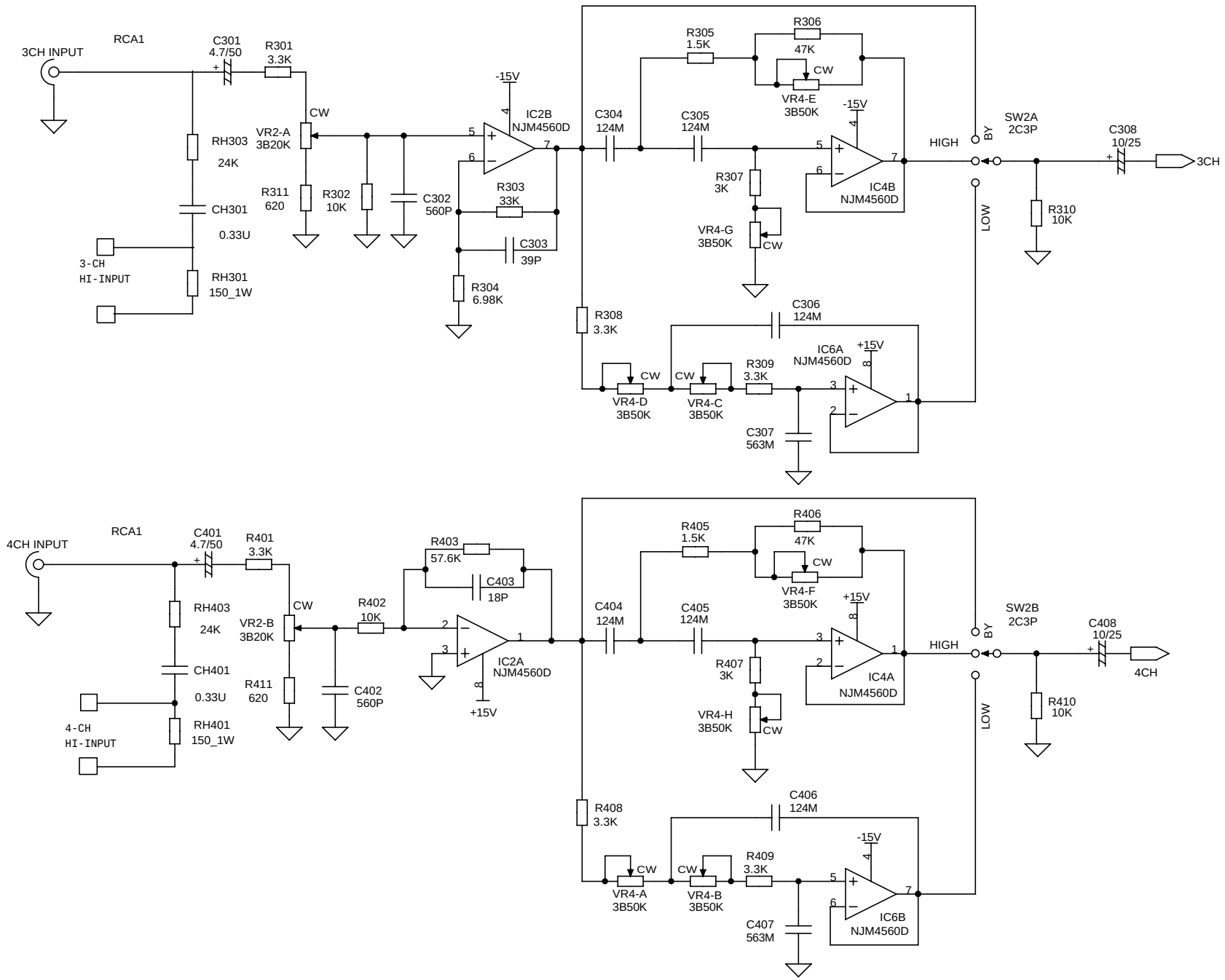
3CH INPUT
RCA1
C301
4.7/50
R301
3.3K
RH303
24K
VR2-A
3B20K
CW
R311
620
R302
10K
CH301
0.33U
3-CH
HI-INPUT
RH301
150_1W
C302
560P
R303
33K
C303
39P
R304
6.98K
-15V
IC2B
NJM4560D
C304
124M
R305
1.5K
R306
47K
VR4-E
3B50K
C305
124M
R307
3K
VR4-G
3B50K
IC4B
NJM4560D
HIGH
BY
LOW
SW2A
2C3P
C308
10/25
3CH
R310
10K
R308
3.3K
C306
124M
IC6A
NJM4560D
+15V
R309
3.3K
VR4-D
3B50K
VR4-C
3B50K
C307
563M
4CH INPUT
RCA1
C401
4.7/50
R401
3.3K
RH403
24K
VR2-B
3B20K
CH401
0.33U
4-CH
HI-INPUT
RH401
150_1W
R411
620
C402
560P
R402
10K
R403
57.6K
C403
18P
IC2A
NJM4560D
+15V
C404
124M
R405
1.5K
R406
47K
VR4-F
3B50K
C405
124M
R407
3K
VR4-H
3B50K
IC4A
NJM4560D
SW2B
2C3P
C408
10/25
4CH
R410
10K
R408
3.3K
C406
124M
R409
3.3K
VR4-A
3B50K
VR4-B
3B50K
C407
563M
IC6B
NJM4560D