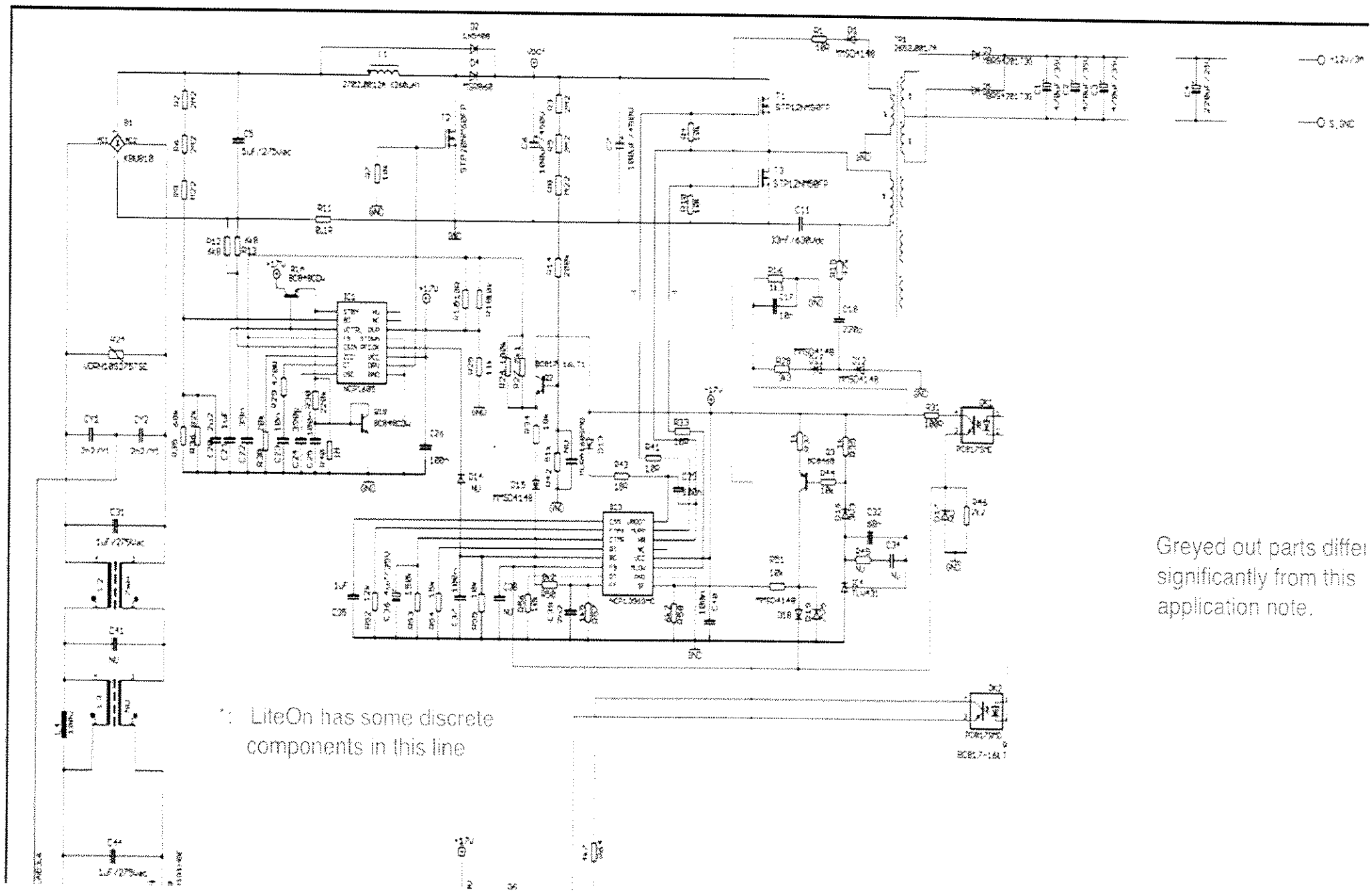

*: LiteOn has some discrete components in this line

Greyed out parts differ significantly from this application note.