SANYO

FILE NO.

SERVICE MANUAL

PDP-50XR7

PDP TV

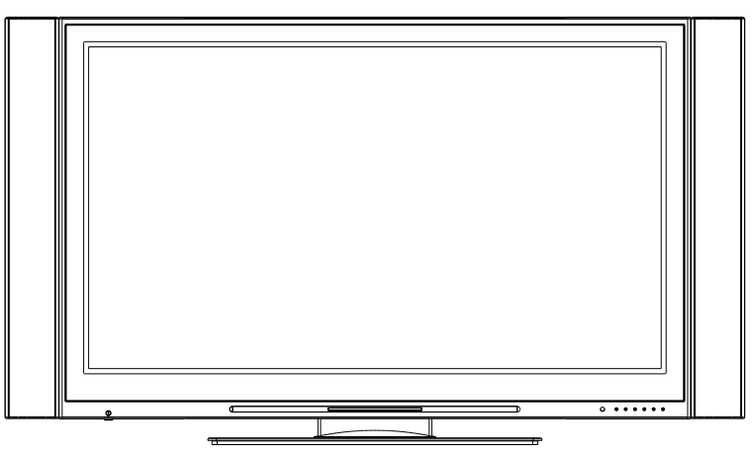

CONTENTS

Safety instructions…… 1
Alignment instruction …… 3
Method of software upgrading…… 6
Working principle analysis…… 12
Block diagram…… 13
IC block diagram…… 14
Wiring diagram …… 19
Troubleshooting guide …… 20
Schematic diagram…… 23
APPENDIX-A: Assembly list
APPENDIX-B: Exploded View

Attention: This service manual is only for service personnel to take reference with. Before servicing please read the following points carefully.

Safety precautions

Please read the “Points for attention for the Maintenance & Repair of PDP” and “Criterion for Identifying the Defects on Screen” as below, before inspecting and adjusting the TV set.

1. “Points for attention for the Maintenance & Repair of PDP”

To avoid possible danger, damage or jeopardy to health and to prevent PDP screen from new damage, the maintenance people must read the following carefully. If they ignore the following warnings, there will be deathful risks:

1.1 Screens vary from one model to another and therefore not interchangeable. Be sure to use the same type of screen in the replacement.

1.2 The operation voltage is approximately 350v for PDP module (including screen, driving circuit, logic circuit and power module). If you want to conduct maintenance work on PDP module when the set is in normal operation or just after the power is off, you must take proper measures to avoid electric shock and never have direct contact or touch with the circuitry of the working module or metal parts. That’s because within a short time relatively high voltage still remains on the capacitor of the driving part even after the power is off. Make sure to begin relevant maintenance operation at least one minute after the power is off.

1.3 Don’t apply on the module any power supply that is higher than the specification. If the power supply used deviates from the value given in the specification, there might be a possibility of leading to fire or damage to the module.

1.4 Never have operation or mounting work under unsuitable environment such as areas in the vicinity of water (bath room, laundry, water chute of kitchen), sources of fire, heat-radiation parts or direct exposure to sunlight. Otherwise there will be kickbacks.

1.5 In case foreign substances such as water, liquid, metal slices or others fall into the module carelessly power must be cut off immediately. Keep the module as it is and do not move anything on the module. Otherwise it might be possible to contact the high voltage or cause shock short circuit so that it may lead to fire or electric shock.

1.6 If there is smoke, abnormal smell or sound from the module, please cut the power off immediately. Likewise in case the screen doesn’t work when the power is on or during the operation, please also cut off the power at once. No more operation in this case.

1.7 Do not remove or plug its connection wire when the module is in operation or right after the power is off. That’s because there remains a relatively high voltage on the capacitor of the driving circuit. If there is a need to remove or plug in the connection wire, please wait at least one minute after the power is off.

1.8 Considering the module has a glass faceplate, please avoid extrusion by external force lest it should cause glass breakage that may get people injured. Two people are needed in cooperation to move this module lest contingency takes place.

1.9 The complete TV set is designed on the basis of full consideration of thermal dissipation by convection, with the round hole on the top for heat emission. To avoid overheat, please do not have any covering on the hole during normal operation and never put it in the place

where the space is narrow and in bad ventilation.

1.10 There are quite a number of circuits in PDP that are integrated ones. Please be on guard against static electricity. During maintenance operation be sure to cover yourself with anti-static bag and before operation make sure to have it sufficiently grounded.

1.11 There are a big number of connection wires distributed around the screen. Please take care not to touch or scuff them during maintenance or removing the screen, because once they are damaged the screen will fail to work and it's not possible to repair it.

If the connection wires, connectors or components fixed by the thermotropic glue need to disengage when service, please soak the thermotropic glue into the alcohol and then pull them out in case of damage.

1.12 Connector for the circuit board of the screen part is relatively fine and delicate. Please take care in the replacement operation lest it should get damaged.

1.13 Special care must be taken during transportation and handling because strenuous vibration could lead to screen glass breakage or damage on the driving circuitry. Be sure to use a strong outer case to pack it up before transportation or handling.

1.14 Please put it for storage in an environment in which the conditions are under control so as to prevent the temperature and humidity from exceeding the scope stipulated in the specification. For prolonged storage please cover it with anti-moisture bag and have them piled and stored in one place. The environmental conditions are tabulated as below:

Temperature	Scope for operation	0~50centigrade
	Scope for storage	-15~60centigrade
Humidity	Scope for operation	20%~80%
	Scope for storage	20%~80%

1.15 If a fixed picture is displayed for a long time, difference in its brightness and color may occur compared with movable pictures. But it doesn't show any problem and the reason is that there is reduced density of fluorescent powder in the former. On the other hand, even if changes take place in the picture, it can keep its brightness for a period of time (several minutes). It's a feature inherent with plasma and it's not abnormal. However please try as much as possible to avoid showing a still picture of high brightness for a long time during operation.

1.16 As a digitalized display devise, this module is provided with error diffusion technology and the gray scale and false enhancement of contour can be displayed by reusing of sub-field. As compared with cathode ray tube, it can be found in the moving picture that at the brim of the face of a person there are some wrong colors.

1.17 During the display of graph (indicating the gradual change in brightness horizontally or vertically) resulting from gray scale test it can be found that the brightness for the two adjacent levels is uneven. This is caused by the reuse of sub-field, the display of load rectification and the electrolysis.

1.18 The screen front plate is of glass. Please make sure that the screen has been put in place during erection. If it is not in place before the erection begins it may lead to screen crack or breakage.

1.19 Make sure the screw used in the mounting of the screen is of the original specs lest it should cause damage to the screen due to mismatch. Special care should be taken not to use too long or

too big screw.

1.20 Care must be taken to guard against dust during assembling or dismantling, especially to avoid dirt from falling in between the screen and the glass lest it should harm the receiving and viewing effect.

1.21 There is piece of insulator stuck on the rear chassis corresponding to the power supply board. It is used to isolate the cool part from the hot part. Please take care to keep it intact lest it should become a potential safety trouble.

1.22 In addition to plasma screen, the glass is a part of high value. It has such functions as anti-radiation, adjustment of color temperature etc. Please handle it carefully.

Alignment instructions

1. Test equipment

PM5518 (video signal generator)

VG-849 (VGA signal generator)

CA210 (white balancer)

2 Alignment flow-chart

The alignment flow-chart is shown as fig-1

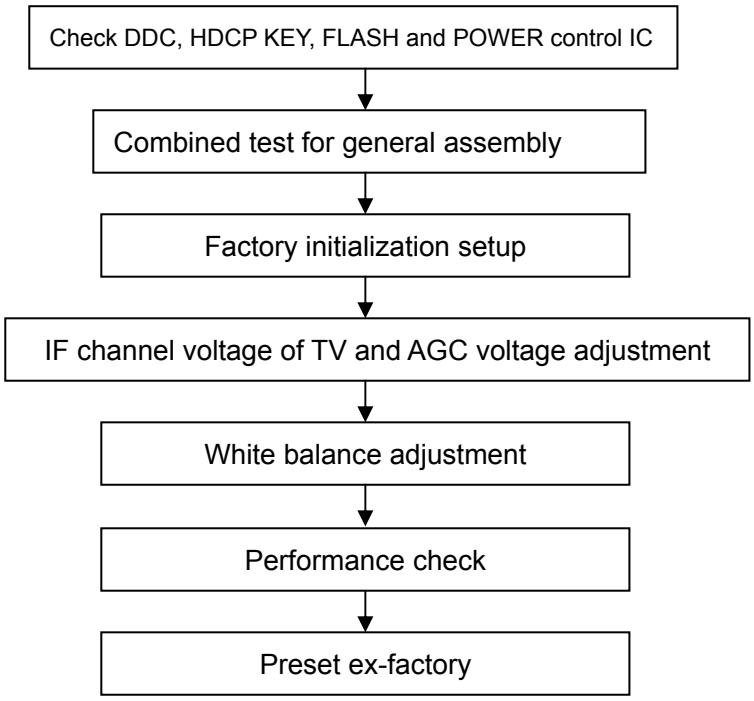

Fig-1 adjustment flow-chart

3 Unit adjustments

Connect all the boards according to wiring diagram, connect with power and observe the display.

Method for entering factory menu: press “INPUT”, “2”, “5”, ”8” and “0” in turn to enter factory menu; press “CH+” and “CH-” to select adjustment items and press “VOL+” and “VOL-” to adjust value items, press “MENU” continuously to exit.

3.1 Initialization

Enter factory menu, select “OPTION” and “HOTEL OPTION” sub-menu, adjustment of items to see table1.

Table1 sub-menu adjustment

Items	Preset	Introduce
HOTEL	0	1: HOTEL OPTION of factory menu is optional 0: HOTEL OPTION of factory menu is not optional
LOGO	1	1: display LOGO in no signal or turn on 0: no LOGO display
ADC PRESCALE	00A	Adjust according different power consumption
SIF PRESCALE	000	Adjust according different power consumption
BACK LIGHT	28	Adjust according different screen
ALL COLOR	1	1: white balance of each channel auto offset based on the HDMI white balance 0: white balance of each channel adjust the offset base separately
ISP	0	0: no unit upgrade on the assembly line 1: unit upgrade on the assembly line
NO STANDY	00	01: turn on; 00: memory function of turn on; 10: standby
INIT VOLUME	0-100	Volume of turn on
INIT CHANNEL	1-200	Channel of turn on
INIT SRC	Source	Source of turn on
EEPROM-MEMORAY RECALL	>	EEPROM Initialization (operate when EEPROM data chaos)

3.2 Adjustment for AFT voltage and AGC voltage of IF channel in TV

3.2.1 IF AFC adjustment

Disconnect J401(B face), input 38.9MHz PAL signal of 80dB from J401 near the socket, Adjust L404 to value 0.9V of TP402. Enter factory menu, adjust TDA4470 from BG to LL, input 33.9MHz SECAM signal of 80dB, adjust RP402 to value 0.9V of TP402, then wed J401.

3.2.2 IF AGC adjustment

Input 184.25MHz RF signal of 60DB from RF terminal, adjust RP401 to value 4V of TP404 and there should be no obvious snowy picture. Increase the signal to 90DBV and it should be display normally and no obvious noise.

3.3 White balance adjustment

3.3.1 white balance adjustment of HDMI

a. Input VG-848 signal from HDMI: TIMING854(800* 600/60Hz) and eighth level gray-scale signal of PAT920. Use color analyzer CA210 to adjust white balance.

b. Enter submenu of COLOR TEMP., Select 9300k of color temperature

c. Fixed value of B GAIN, adjust R GAIN and G GAIN, let the color coordinate of the seventh level be 285 and 293. Fixed value of B OFF, adjust R OFF and G OFF, let the color coordinate of second level be 285 and 293 and the brightness be about 3nit-10nit. Adjustment R GAIN, G GAIN, R OFF and G OFF repeatedly until the value of the two levels gray-scale be 285 and 293.

3.3.2 VGA/YPBPR/AV white balance check and correct

a. Input VG-848 signal of VGA: TIMING854(800* 600/60Hz) (PATIERN:CROSS) and auto

adjust to full screen, then input PAT948 black/white signal, enter factory menu ADC ADJ, select AUTOTUNE and wait for OK display. Input PAT920(8 gray levels), check if the white balance is normal, if not, set ALL COLOR to 0 and fine adjust according the method of 3.3.1

b. connect VG-848 signal of YPBPR to YPBPR terminal and input TIMING972(1080i/60HZ) color bar of PAT908(include black/white bar), Enter submenu of ADC ADJ, Select AUTOTUNE and wait for OK display. Input PAT920(8 gray levels), check if the white balance is normal, if not, set ALL COLOR to 0 and fine adjust according the method of 3.3.2

c. Input AV signal(PM5518, 8 gray levels) to VIDEO terminal, check if the white balance is normal, if not, set ALL COLOR to 0 and fine adjust according the method of 3.3.2

Note: it can't set back to 1 once ALL COLOR changes to 0.

4 Software upgrade

When software upgrading please enter factory menu first, enter ISP of OPTION, set ISP to 1 and you can begin to upgrade. After upgrade finished, it needs to set ISP back to 0. If the picture can't display when upgrading, it needs to web J1 of 01S board. Please disconnect J1 again after upgrading.

5 Performance check

5.1 TV function

Enter searching menu → auto search, connect RF-TV terminal with central signal source and check if the picture is normal, if there are channels be skipped. Check TXT and parental control.

5.2 AV/S, YpbPr terminals

Input AV/S, YPbPr/YCbCr HD signal, check if it is normal.

5.3 VGA terminal

Insert VGA terminal, input VGA format signal of 640X480@60 Hz and check if the display is normal.

5.4 HDMI terminal

Insert HDMI terminal, input signal of 640 X 480@60 Hz signal and check if the display is normal.

5.5 check sound channel

Check the speaker and headphone of each channel.

5.6 RS232 terminal

Insert earphone to COM terminal and check if the long-distance control function is normal.

5.7 other function check

Check the turn on/turn off timer, asleep timer, picture/sound mode, OSD, freeze/mute, stereo, ect.

5.8 presetting before ex-factory

Item	Setting
PICTURE MODE	STANDARD
COLOR MODE	NORMAL
NR	WEAK
ZOOM	FULL
SOUND MODE	STANDARD
AVC	OFF

Item	Setting
BALANCE	50
VOLUME	50
SLEEP TIMER	OFF
TTX LANGUAGE	WEST
BLUE SCREEN	OFF

Item	Setting
OSD LANGUAGE	English
OSD HPOSITION	50
OSD VPOSITION	50
OSD HALFTONE	50
OSD DURATION	15

Method of software upgrading

1. The tools and software demanded

1) Please confirm that PC has the software of ISP_TOOL and install the parallel interface drive program Port95nt.

2) ISP_TOOL icon is bellow:

3) One serial cable (25 pins) and one VGA cable (15 pins), the serial cable connects the PC and the upgrade instrument, the VGA cable connects the TV and the upgrade instrument.

2. The steps for upgrading software

1) Please confirm that the connection wires and the upgrade instrument are connected well before the software written and then power on the TV.

2) Double click the icon ISP_TOOL to open it:

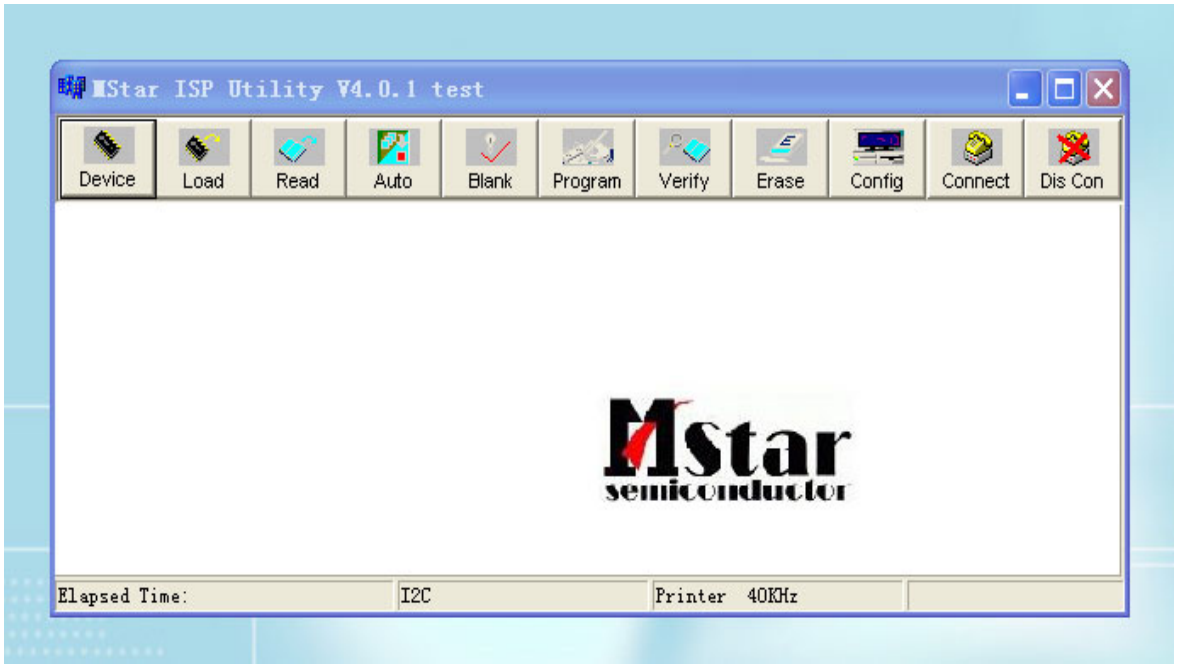

3) Press “Connect“ to connect TV, if the connection is done successfully as shown below, then press “enter”.

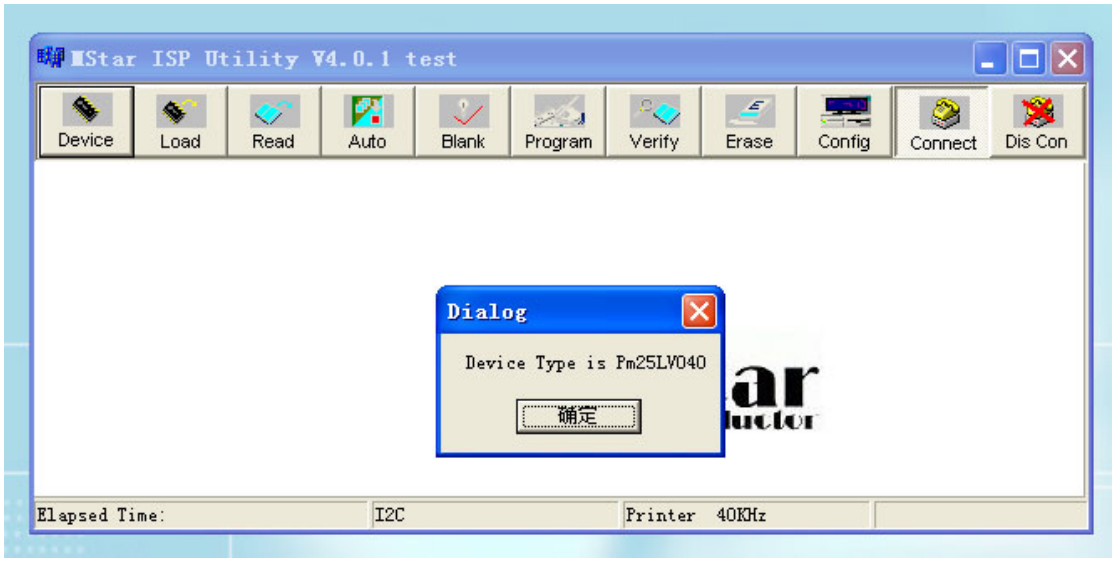

Note: if it appears error, check the connection wires and check if ISP item of the factory menu is set to 1, if not, please set it to 1.

4) After connection is done, it needs to read the Binary document. Press “Read” as shown below:

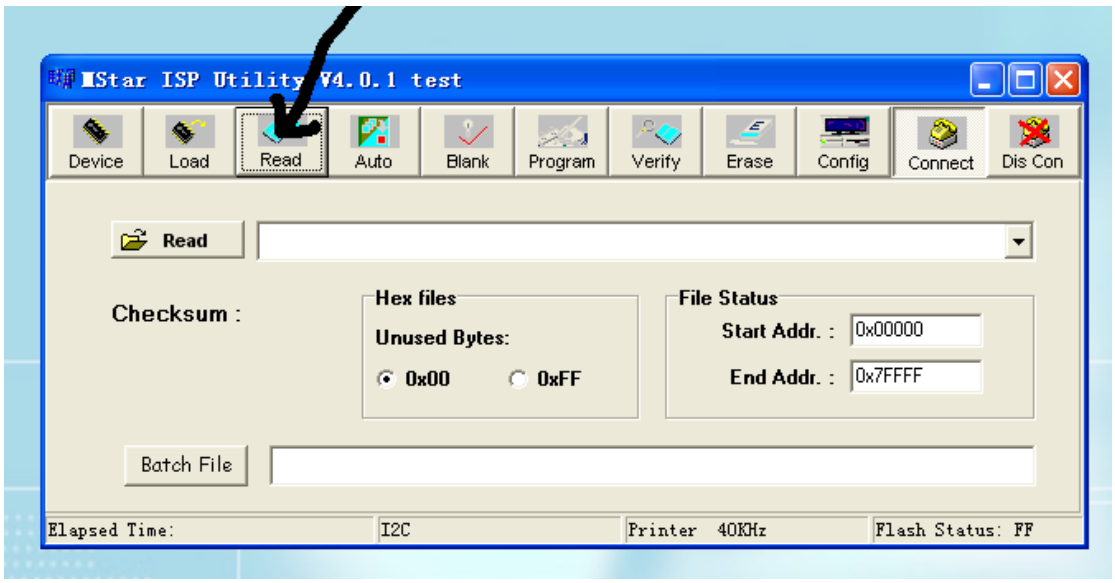

5) Search the document needed to write in the “Read” check box.

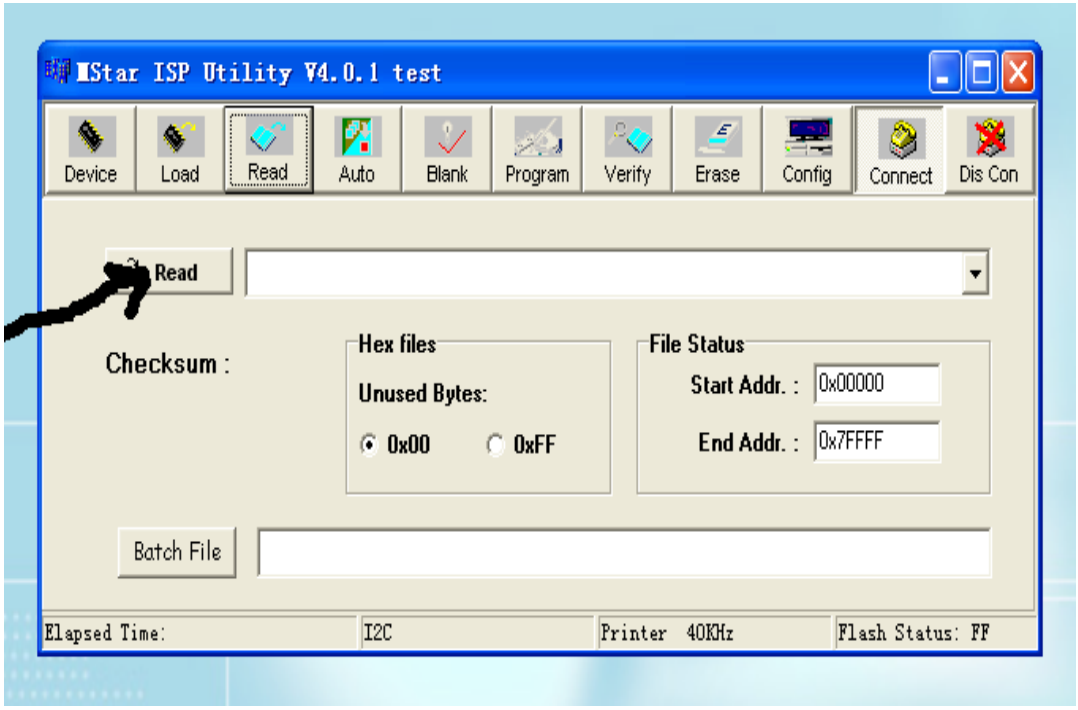

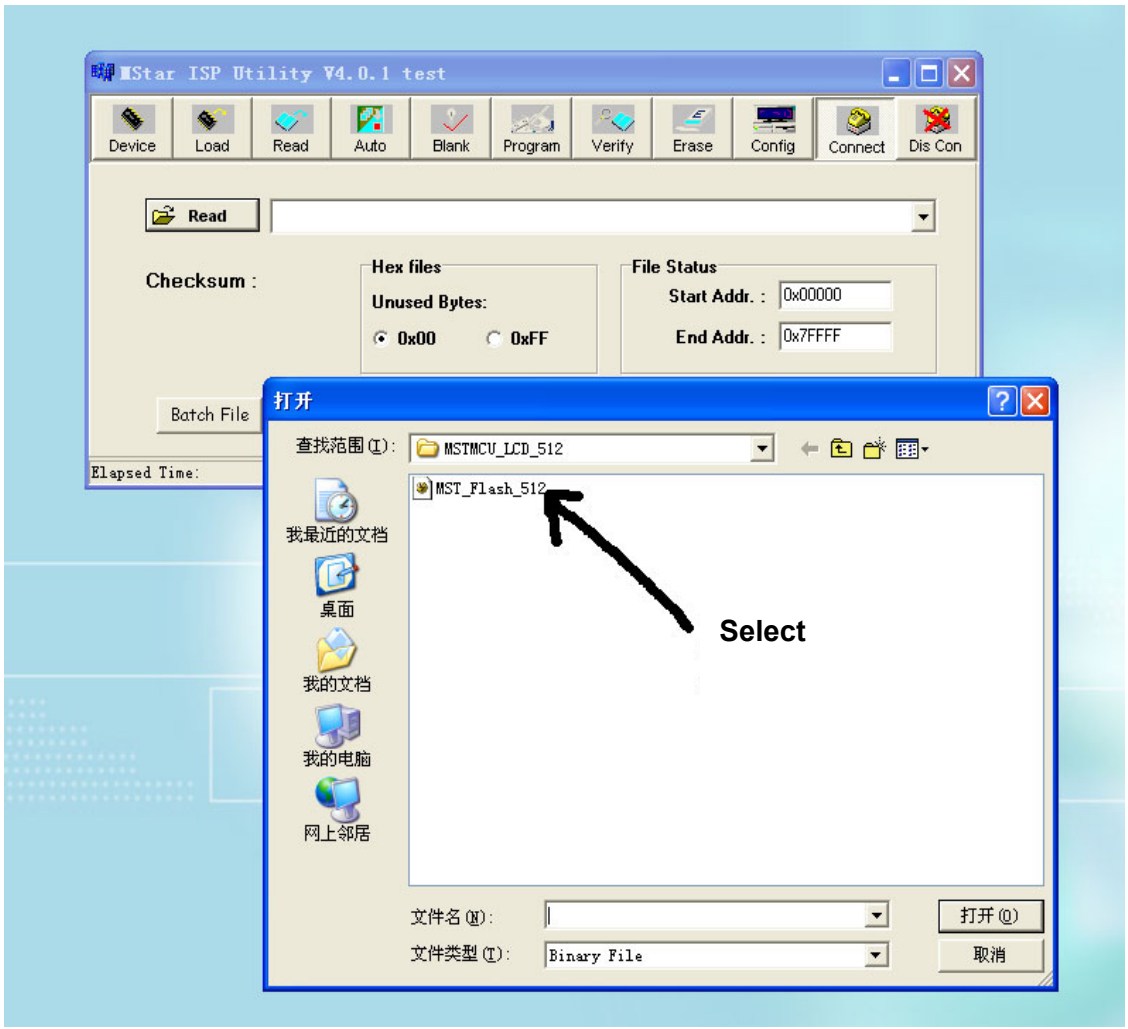

6) Select the document then the window will appear as shown below:

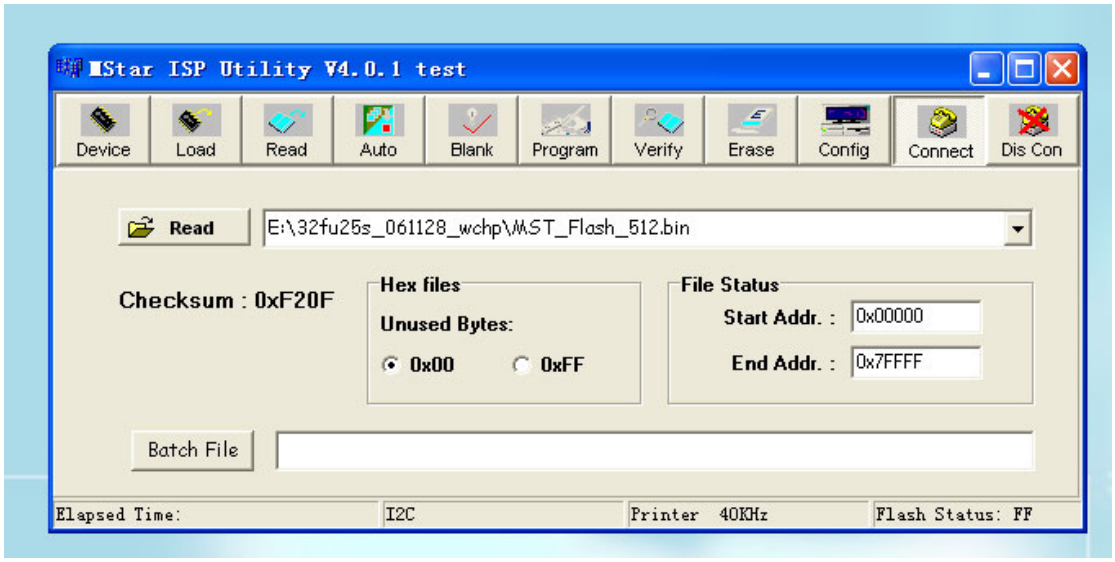

7) Press “Auto” to select the writing function.

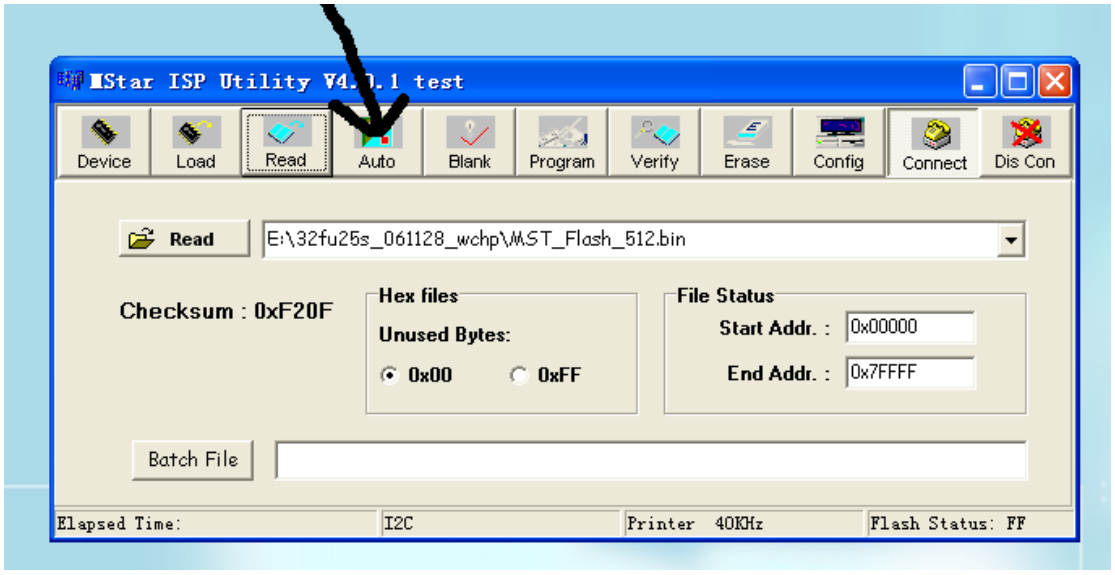

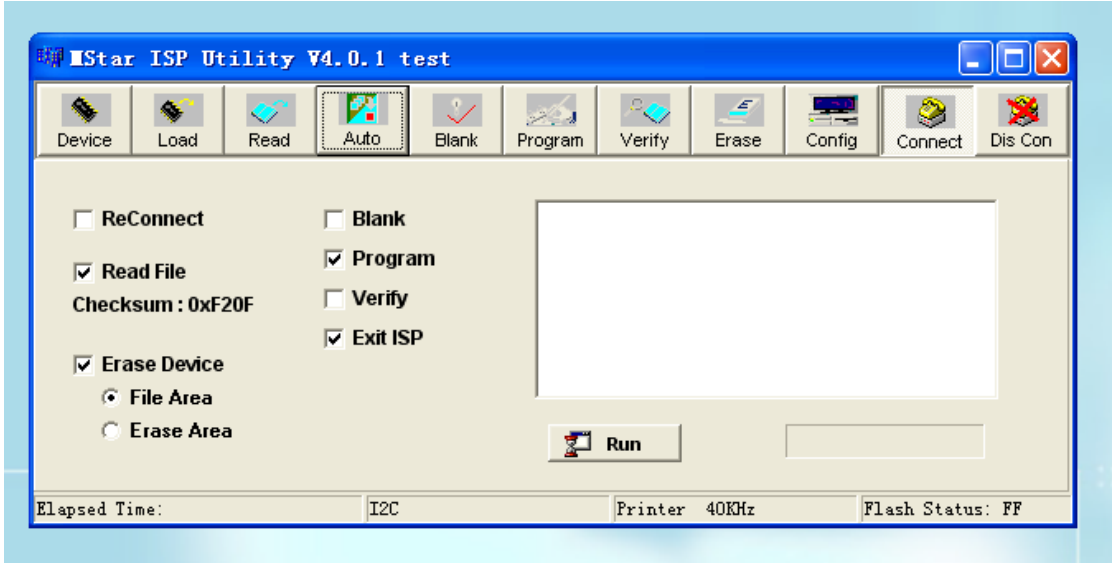

Select the items shown in the picture above:

(a) Read File

(b) Program
(c) Exit ISP
(d) Erase Device
(e) File Area
8) Press “Run” to begin the writing program, wait till the blue bar is complete.

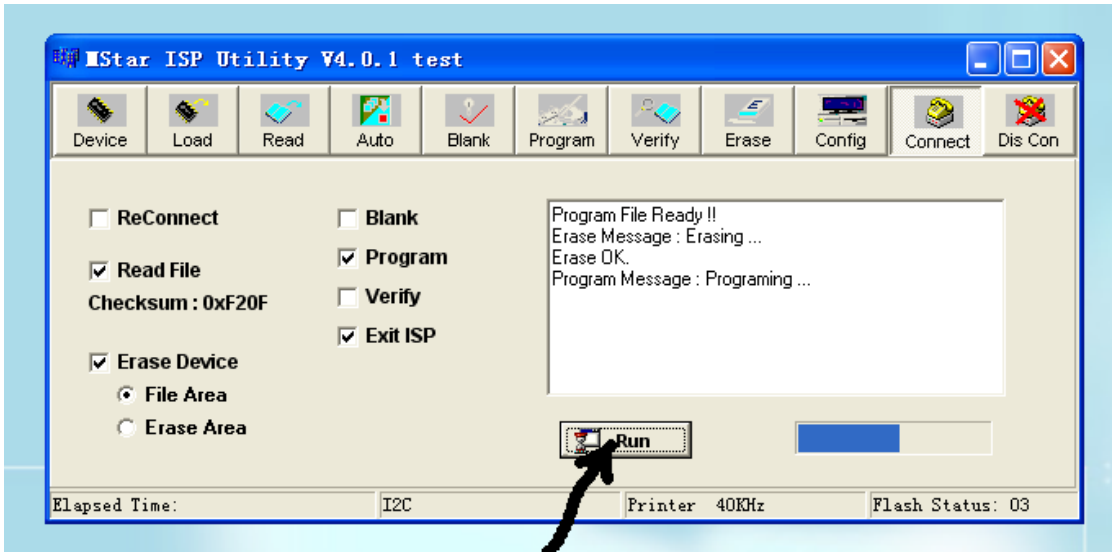

After writing, it will display OK:

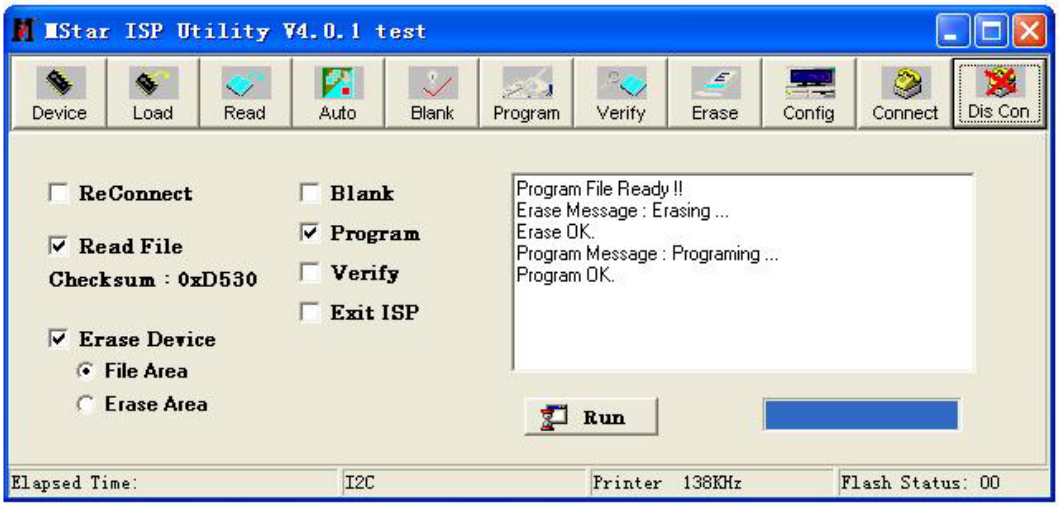

If there is error appeared (shown as below), press “Run” again to rewrite the program till it is success.

Note1: keep the connection well and don't cut off the power during the writing process.

Note2: the writing speed can be adjusted as shown below. Select "Config" then adjust Speed BAR, the value is bigger the speed is faster. But it is easier to appear error when increase the speed, so it need to select a suitable speed according the PC.

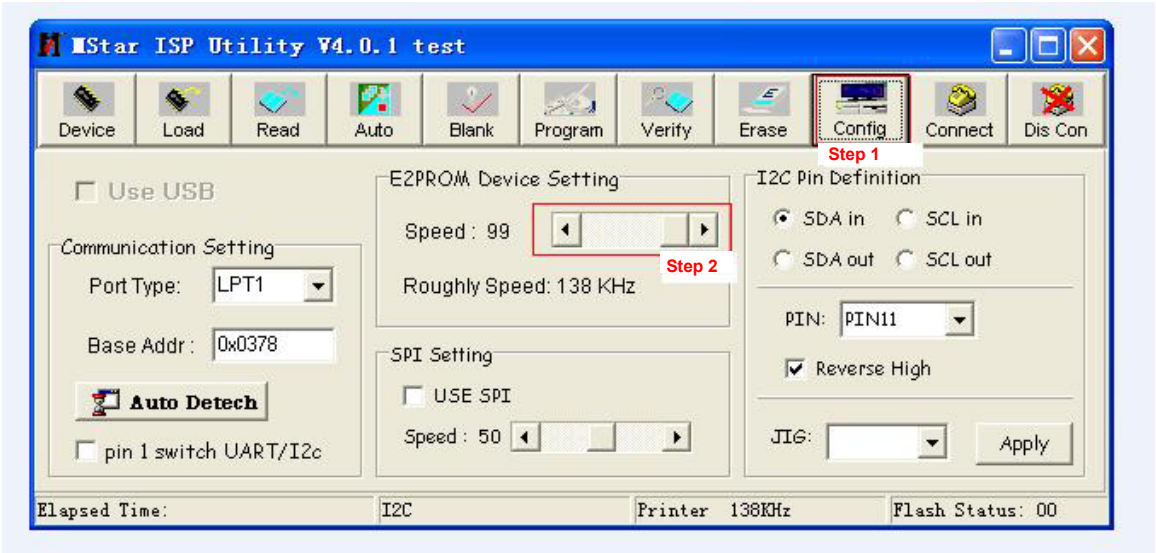

Working principle analysis of the unit

The RF signal received by antenna will be sent to tuner TUN401, then IF signal will be obtained through high amplifier and mixed frequency, through pre-intermediate amplified by V408, then it will be sent to acoustic surface-wave Z407 to do IF filter and get better IF characteristics, then it will be sent to N404 (TDA4470) to do intermediate amplification, phase-locked loop VCO and synchronous wave detection to get video signal TV-V; after pre-intermediate amplification IF will also be sent to acoustic surface-wave Z406 to do filter at the same time, then it will be sent to N404 to do intermediate amplification and output the second sound intermediate frequency signal (TV-SIF).

The TV-V signal output from TDA4470 together with TV-SIF will be sent to main IC NS4(MST9E88L).

Video signals of AV1/S, VGA, YPbPr and HDMI will be sent to MST9E88L, too.

Video RGB of SCART1 and S-Y, S-C of SCART2 will still be sent to MST9E88L, and the audio signal of them via audio switch N302(HEF4052BT) selection after also sent to MST9E88L.

The main IC NS4(MST9E88L) is a high performance and fully integrated IC, which can realize HDMI processing, video demodulating, video switch selection, A/D and D/A conversion, interlace/de-interlace processing, modes conversion, OSD and low-voltage differential output, ect. And it also has functions of audio selection, processing and MCU.

The video signal via MST9E88L processing, output 4 pairs differential signal and 1 pair clock signal for PDP panel display. TV-V output from TDA4470 via double video amplifying, it will be sent to SCART1 for AV-OUT. AV processed by MST9E88L via double video amplifying will be sent to SCART2 for AV-OUT, too.

Audio signal via MST9E88L processing will be sent to sound amplifier N405 (MP7722DF) amplifying to speaker. The audio also sent to earphone amplifier N406(BH3547F) amplifying to earphone. TV audio signal will be sent to D/A converter NS6(DS4344) through I2S bus converting to analog audio signal TV-L/R, then sent to SCART1 for AV-OUT. At the same time, TV-L/R together with AV-L/R processed by MST9E88L will be sent to audio switch NS8(HEF4052BT), after selecting to SCART2 for AV-OUT.

Block diagram

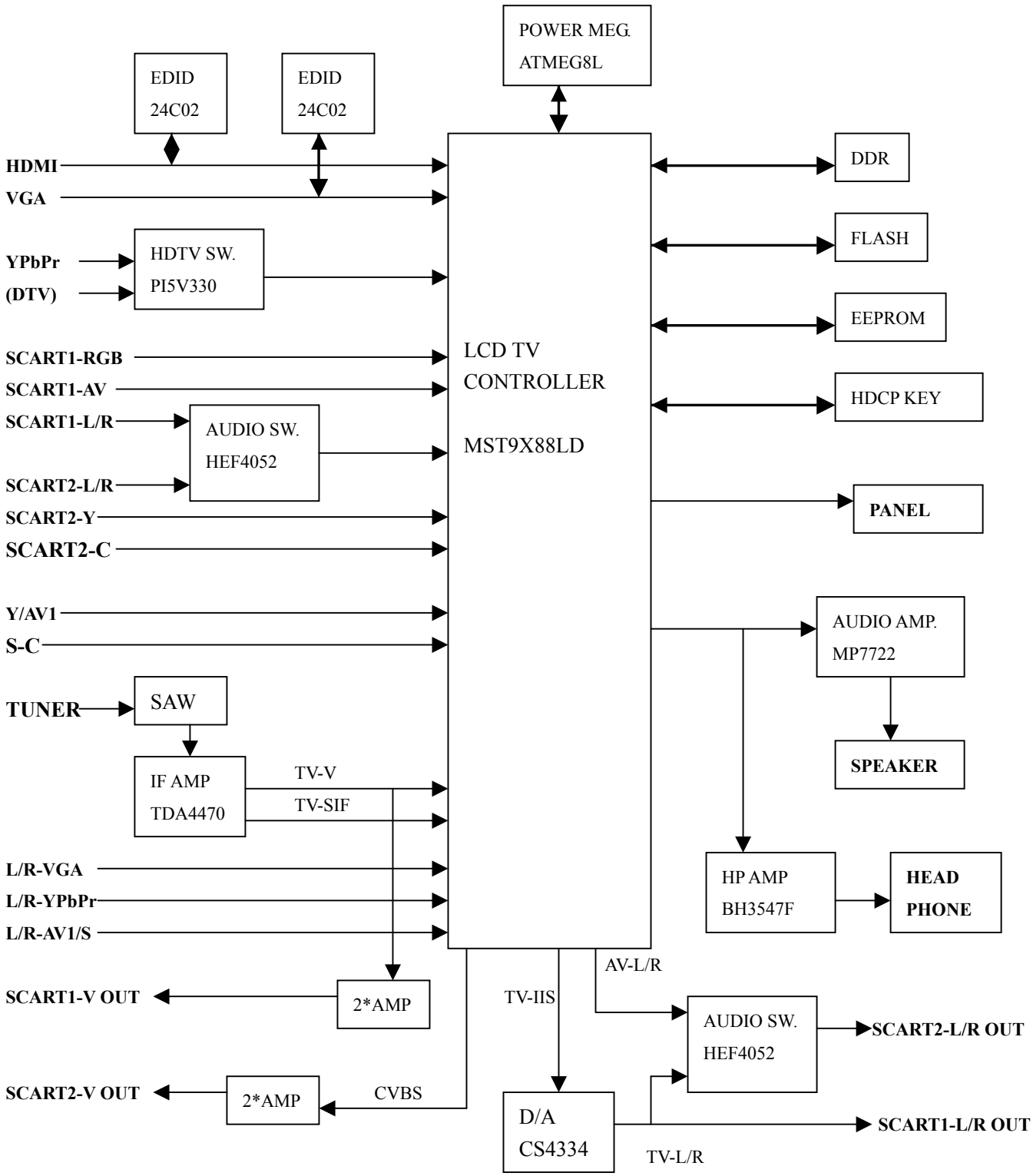

IC block diagram

1. MST9E88L

The MST9E88L is a high performance and fully integrated IC for multi-function LCD monitor/TV with resolutions up to SXGA/WXGA. It is configured with an integrated triple-ADC/PLL, an integrated DVI/HDCP/HDMI receiver, a multi-standard TV video and audio decoder, a video de-interlacer, a scaling engine, the MStarACE-3 color engine, an on-screen display controller, an 8-bit MCU and a built-in output panel interface. With external frame buffer, 3-D video decoding and processing are fulfilled for high-quality TV applications. To further reduce system costs, the MST9E88L also integrates intelligent power management control capability for green-mode requirements and spread-spectrum support for EMI management.

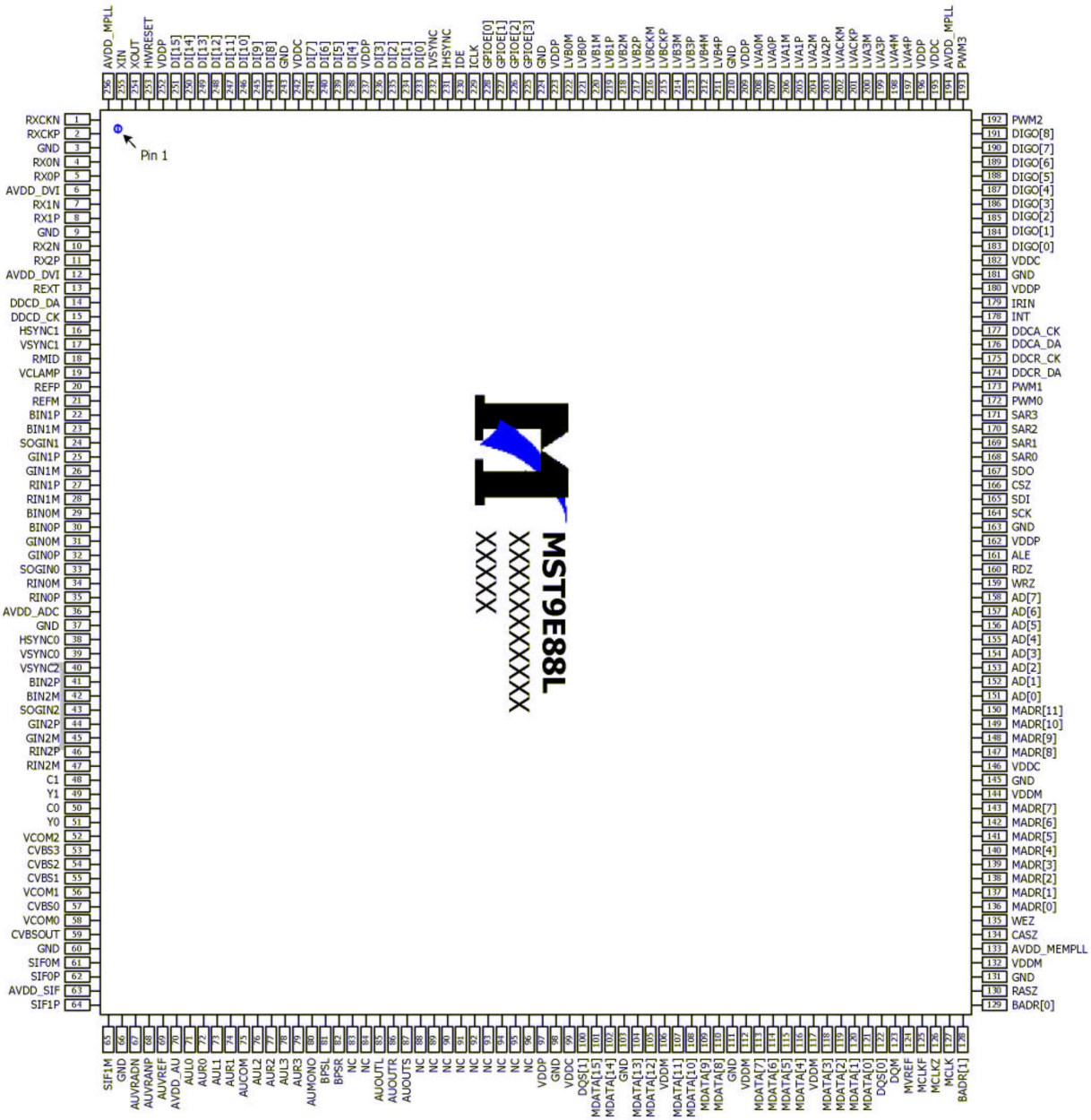

2. MP7722DF

The MP7722 is a stereo 20W Class D Audio Amplifier. It is one of MPS'second generation of fully integrated audio amplifiers which dramatically reduces solution size by integrating the following:

180mΩ power MOSFETs

Startup / Shutdown pop elimination

Short circuit protection

Mute / Standby

The MP7722 utilizes a single ended output structure capable of delivering 2 x 20W into 4Ωspeakers. MPS Class D Audio Amplifiers exhibit the high fidelity of a Class A/B amplifier at efficiencies greater than 90%. The circuit is based on the MPS' proprietary variable frequency topology that delivers low distortion, fast response time and operates on a single power supply.

TYPICAL APPLICATION

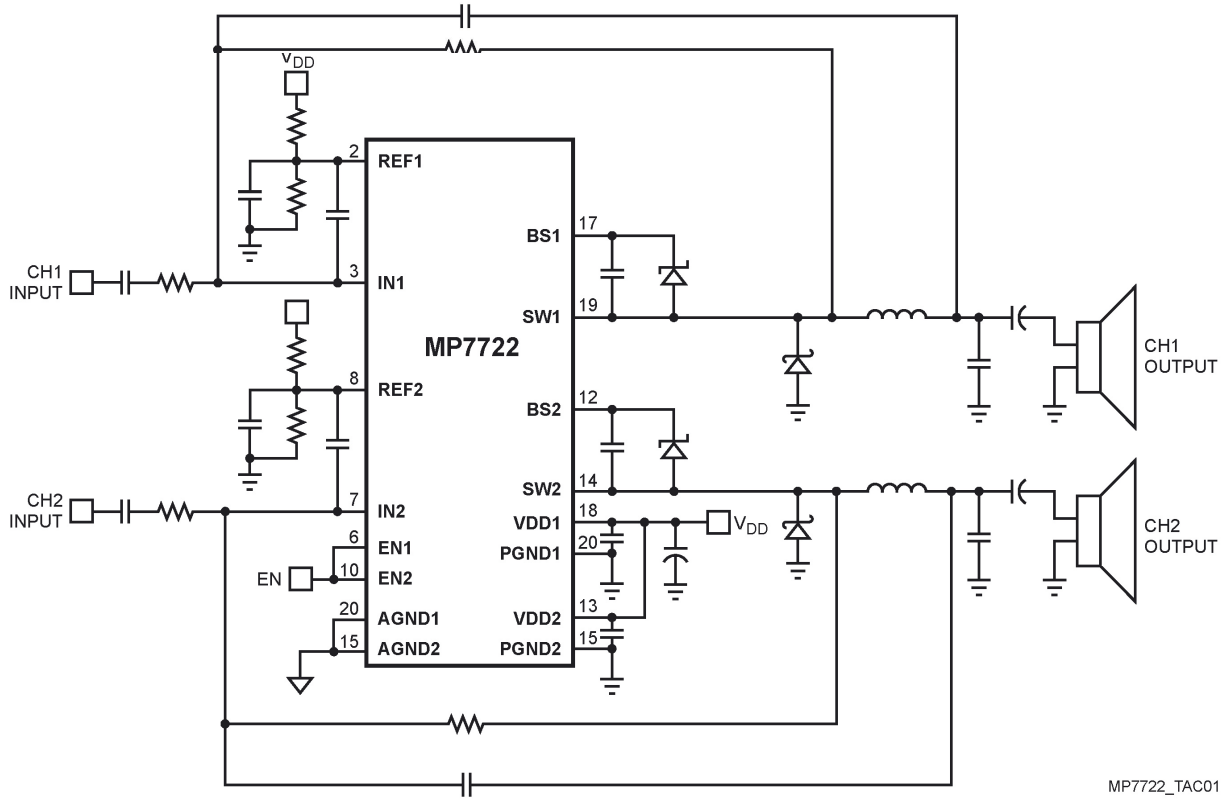

PACKAGE REFERENCE

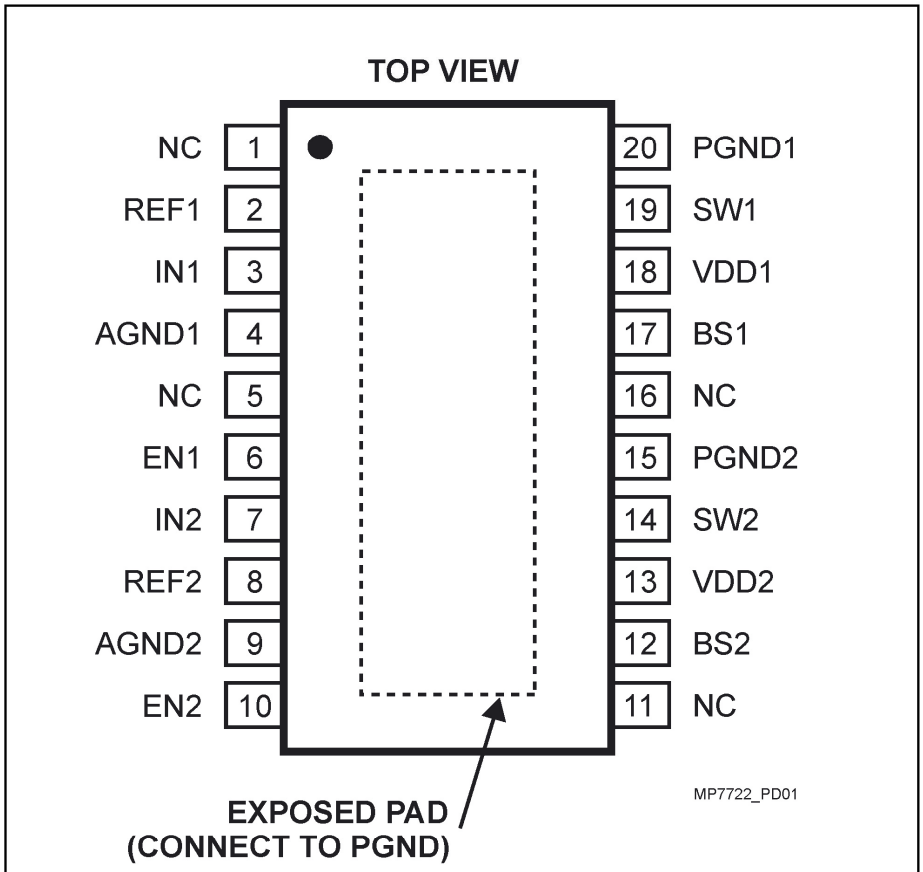

Part Number*	Package	Temperature
MP7722DF	TSSOP20F	–40°C to +85°C

3. TDA4470

The TDA4470 is an integrated bipolar circuit for multi-standard video/sound IF(VIF/SIF) signal processing in TV/VCR and multimedia applications. The circuit processed all TV video IF signals with negative modulation (e.g., B/G standard), positive modulation (e.g., L standard) and the AM, FM/NICAM sound IF signals.

Block Diagram

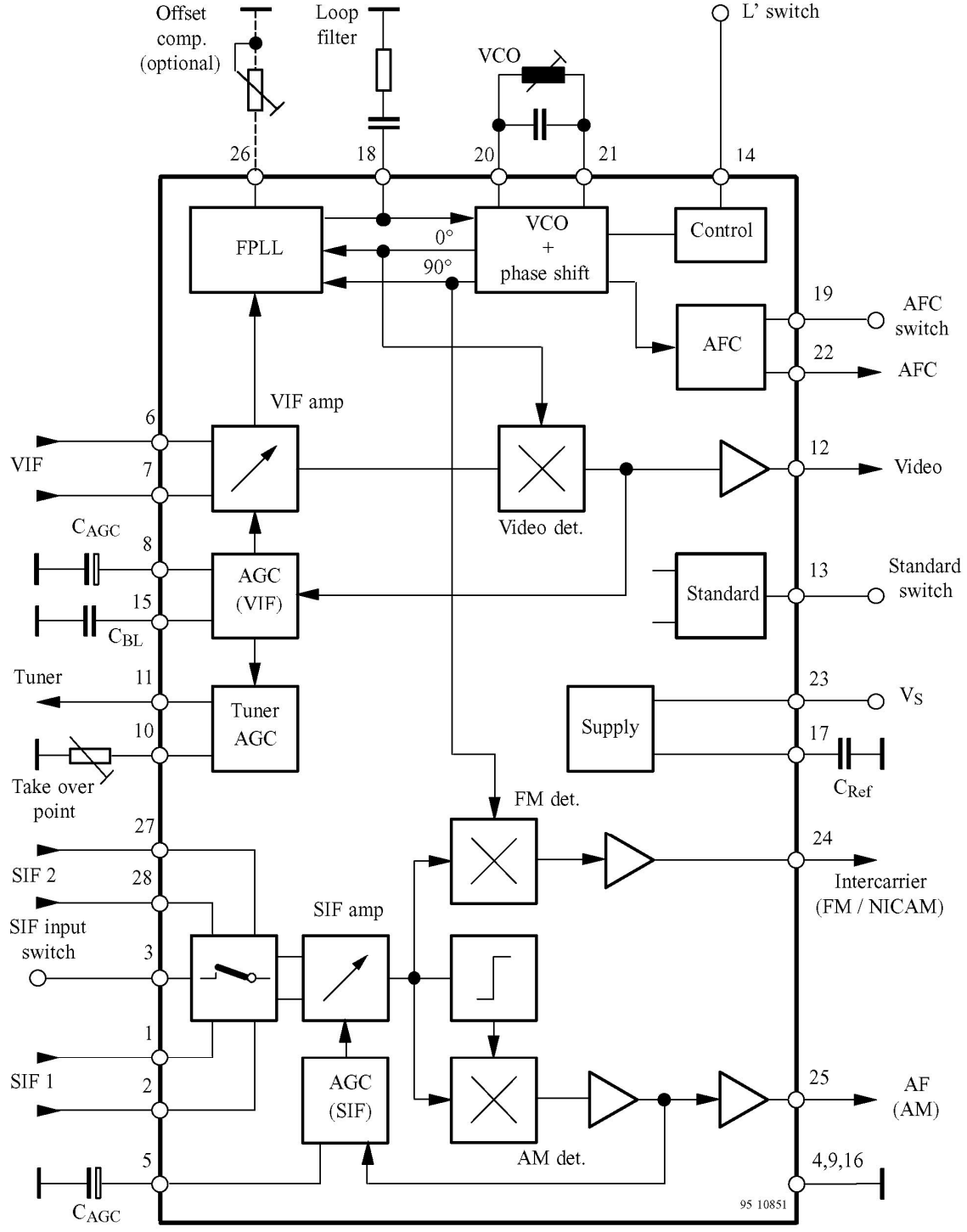

Figure 1. Block diagram

Pin Description

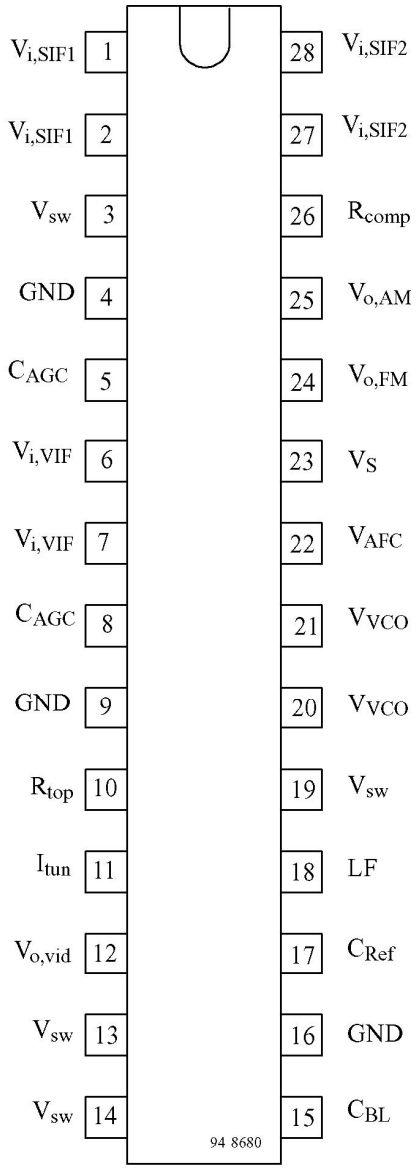

Figure 2. Pinning

Pin	Symbol	Function
1, 2	$V_{i,\ SIF1}$	SIF1 input (symmetrical)
3	V_{sw}	Input selector switch
4, 9, 16	GND	Ground
5	C_{AGC}	SIF-AGC (time constant)
6, 7	$V_{i,\ VIF}$	VIF input (symmetrical)
8	C_{AGC}	VIF-AGC (time constant)
10	R_{top}	Take over point, tuner AGC
11	I_{tun}	Tuner AGC output current
12	$V_{o,vid}$	Video output
13	V_{SW}	Standard switch
14	V_{SW}	L' switch
15	C_{bl}	Black level capacitor
17	C_{ref}	Internal reference voltage
18	LF	Loop filter
19	V_{sw}	AFC switch
20, 21	V_{VCO}	VCO circuit
22	V_{AFC}	AFC output
23	V_S	Supply voltage
24	$V_{O,\ FM}$	Intercarrier output
25	$V_{O,\ AM}$	AF output – AM sound
26	R_{comp}	Offset compensation
27, 28	$V_{i,\ SIF2}$	SIF 2 input (symmetrical)

Wiring diagram

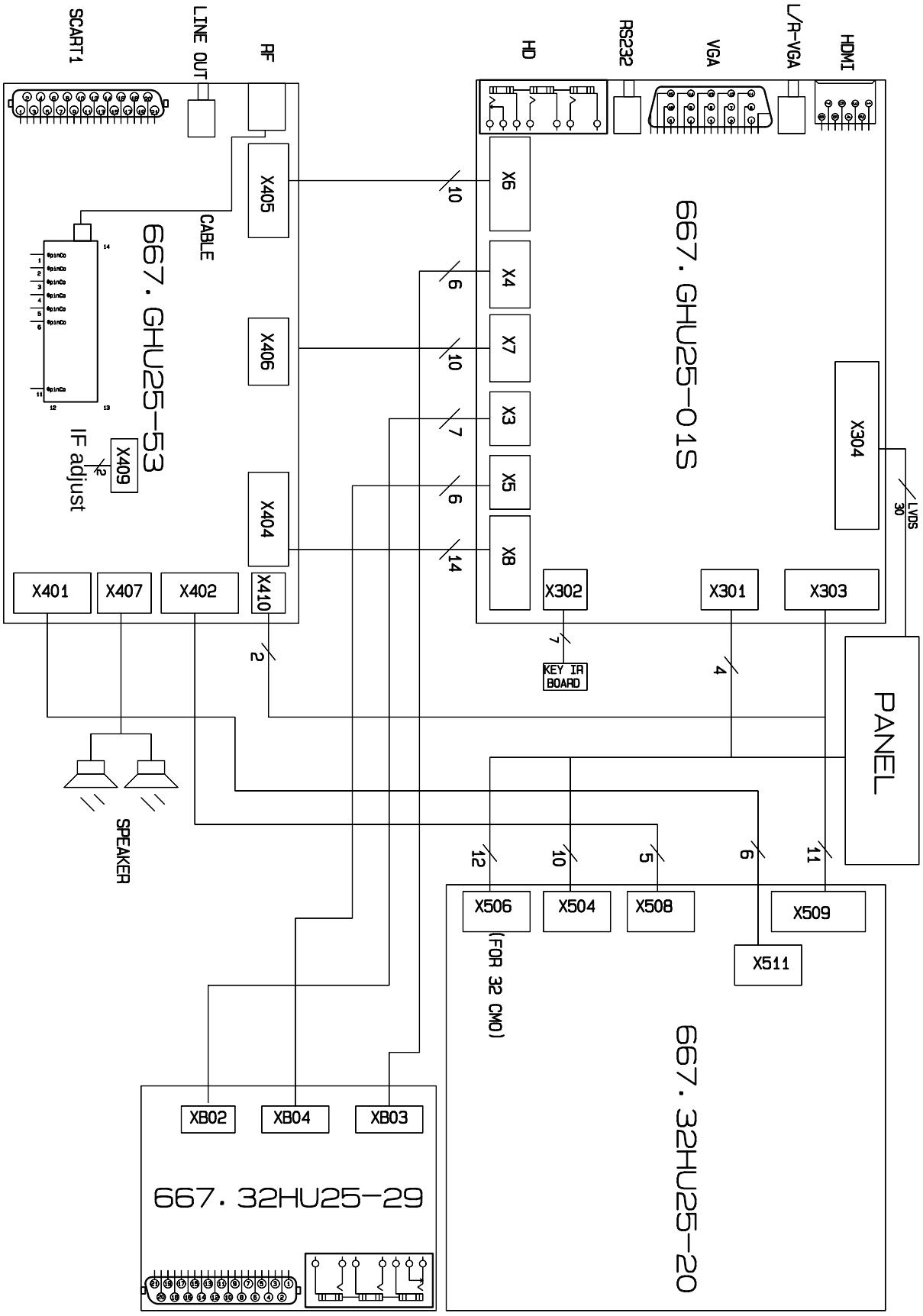

Trouble shooting

1. No raster

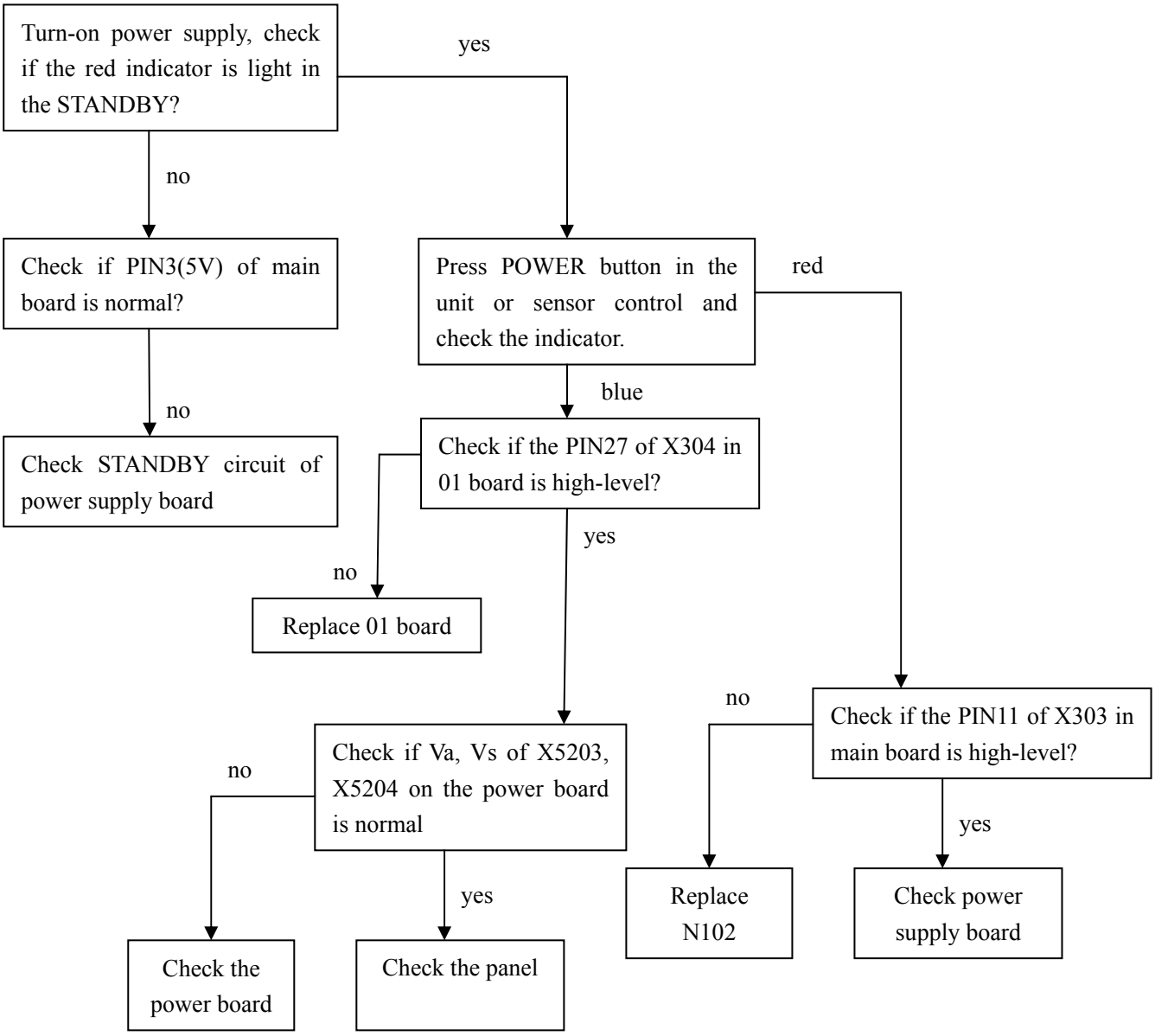

2. Raster, but no picture

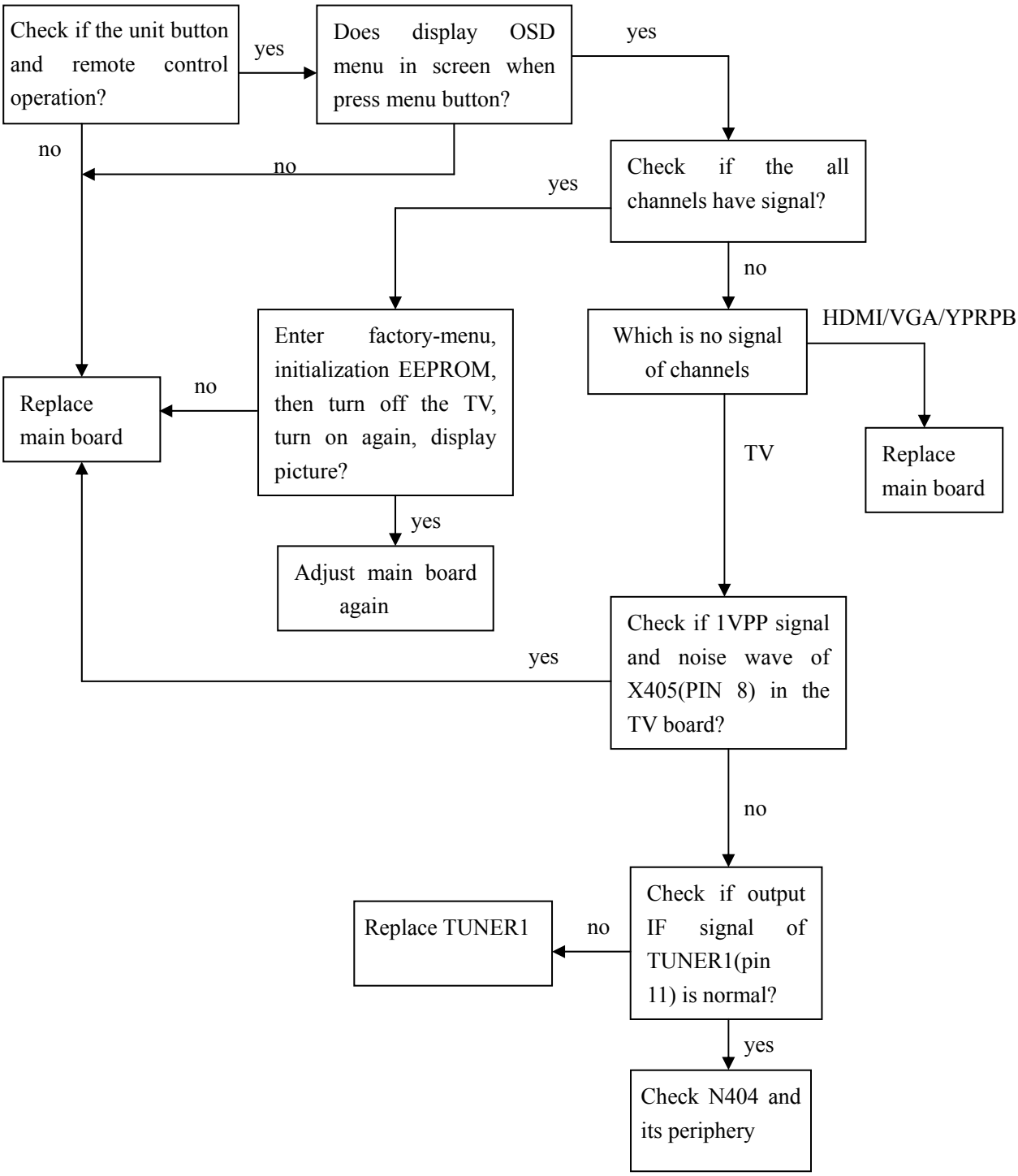

3.no sound

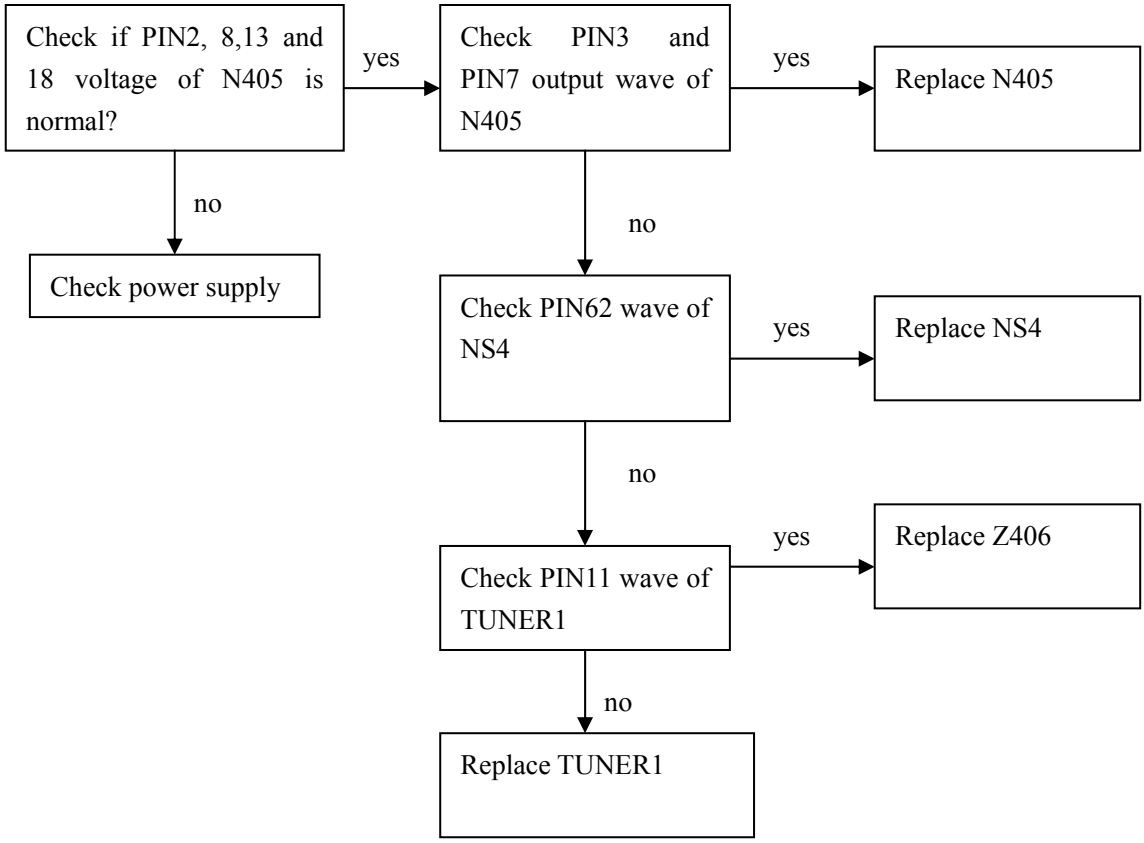
Check if PIN2, 8,13 and 18 voltage of N405 is normal?
yes
Check PIN3 and PIN7 output wave of N405
yes
Replace N405
no
Check power supply
no
Check PIN62 wave of NS4
yes
Replace NS4
no
Check PIN11 wave of TUNER1
yes
Replace Z406
no
Replace TUNER1

003:A5 YPbPr_R
003:A5 YPbPr_L
004:B2 Pr1
004:B2 Pb1
004:B1 Y1
+5V_YPrPb
R8 68
R9 68
R2 68
R3 68
R4 68
R5 330
R6 330
R7 330
R10 6.8K
R11 75
R12 6.8K
R13 75
R14 6.8K
R15 75
R16 10K
R17 10K
R18 10K
C2 100n
C3 100n
C4 100n
C5 100n
C6 100n
C7 100n
V1 BC847AW
V2 BCB47AW
V3 BC847AW
C10 47u 10V
C11 47u 10V
C12 47u 10V
C13 100n
C14 100n
N1 PESD5VOL4UG
N2 PESD5VOL4UG
R19 18K
R23 18K
R24 10K
R25 10K
Z8 10MHz
Z9 10MHz
R20 75
R21 75
R22 75
X2 AWF-8413
R1
R2
G1
B1
Y2
M2
R2

SCART2_VOUT 002:H1
SCART2_ROUT 003:L2
SCART2_LOUT 003:L1
003:C8 SCART2_IN
003:A4 SCART2_Y
003:A4 SCART2_C
003:A4 Y/AV1
003:A4 S_C
003:A1 S_DECT
004:A3 SCART2_R
004:A3 SCART2_L
003:A5 AV1_R
003:A5 AV1_L
SCART2_VOUT
SCART2_ROUT
SCART2_LOUT
SCART2_IN
SCART2_Y
SCART2_C
Y/AV1
S_C
S_DECT
SCART2_R
SCART2_L
AV1_R
AV1_L
T_C10-05A X3
T_C10-04A X4
T_C10-06A X5
GND-D

003:A3 SCR
003:A5 TV_IN
003:A5 SCART1_VIN
003:A3 SCG
003:A3 SCB
003:A3 SC_SDA
003:D6 TV_SIF
004:A3 SCART1_L
004:A3 SCART1_R
AMP_ROUT 003:A6
AMP_LOUT 003:A6
SCART1_ROUT 003:L5
SCART1_LOUT 003:L6
R1 0
C1 10n
SCR
TV_IN
SCART1_VIN
SCG
SCB
TV_SIF
SCART1_L
SCART1_R
AMP_ROUT
AMP_LOUT
SCART1_ROUT
SCART1_LOUT
T_C10-10A X6
T_C10-10A X7
GND-D

002:F3 +5V_1
C19 220n
003:C8 SC_FS
003:L1 PH_DECT
003:I8 L*
003:I8 L
003:I8 AMP_MUTE
003:A4 SC_FSW
003:C8 IF_AFT
003:L3 S0
003:L3 S1
002:A1:003:C7 SDA
002:A1:003:C7 SCL
SC_FS
PH_DECT
L*
L
AMP_MUTE
SC_FSW
IF_AFT
SDA
SCL
T_C10-14A X8
GND-D

CONNECT TO SCART2 BOARD

VGA
X9 HDR-F15S-3
R63 ?
R64 ?
002:A1:003:B9 RXD
TXD 002:A1:003:B9
+5V_1
X11
Z3 470MHz
Z4 470MHz
Z5 470MHz
Z6 470MHz
Z7 470MHz
R35 ?
R36 ?
R37 ?
N3 PESD5VOL4UG
R53 68
R50 68
R51 68
R52 68
R54 100
R55 100
R56 100
R60 820
R61 820
C23 100n
C24 100n
C25 1n
C26 100n
A 003:A3
G 003:A3
SOG 003:A3
B 003:A3
HSYNC_IN 003:A2
VGA_DETECT 002:A2
VSYNC_IN 003:A2
N4 PESD5VOL4UG
D2 MMBD1204
L1 STBL2012-501
L2 STBL2012-501
C21 100n
C22 47u 10V
C17 100n
C18 47u 10V
GND-D
R38 4.7K
R39 4.7K
R48
R49 4.7K
R57 22
R58 22
N6 24LC521A/SN
DNS R32 ?
R34 100
R33 100
R71 2.7K
R72 2.7K
R74 510
R69 510
R70 510
BC847AW V6
BC847AW V7
D3 LL4148
+3.3VDD
+3.3V
003:L1 DATAREQUEST
Z1 10MHz
Z2 10MHz
R27 10K
R28 10K
R30 18K
R31 18K
VGA Aud10
JY-3541L-01-030 X10
N5 PESD5VOL4UG
C15 100n
003:A5 VGA_L
003:A5 VGA_R
003:I8 HPDCTRL
R57 68
R58 68
V4 BCB47AW
1.2K R73
1K R26
HDMI X1
GND-D
003:A2 HDMI_SCL
003:A2 HDMI_SDA
003:A2 RXC-
003:A2 RXC+
003:A2 RX0-
003:A2 RX0+
003:A2 RX1-
003:A2 RX1+
003:A2 RX2-
003:A2 RX2+
R40 10
R41 10
R42 10
R43 10
R44 10
R45 10
R46 10
R47 10

CONNECT TO ANALOG BOARD

N3 CM1213-08MS
N7 PESD5V0L4US
N9 M24C08-WMN6
R65 4.7K
R66 4.7K
R67 150
R68 150
D1 MMBD1204
C16 220n
C20 100n
R29 ?

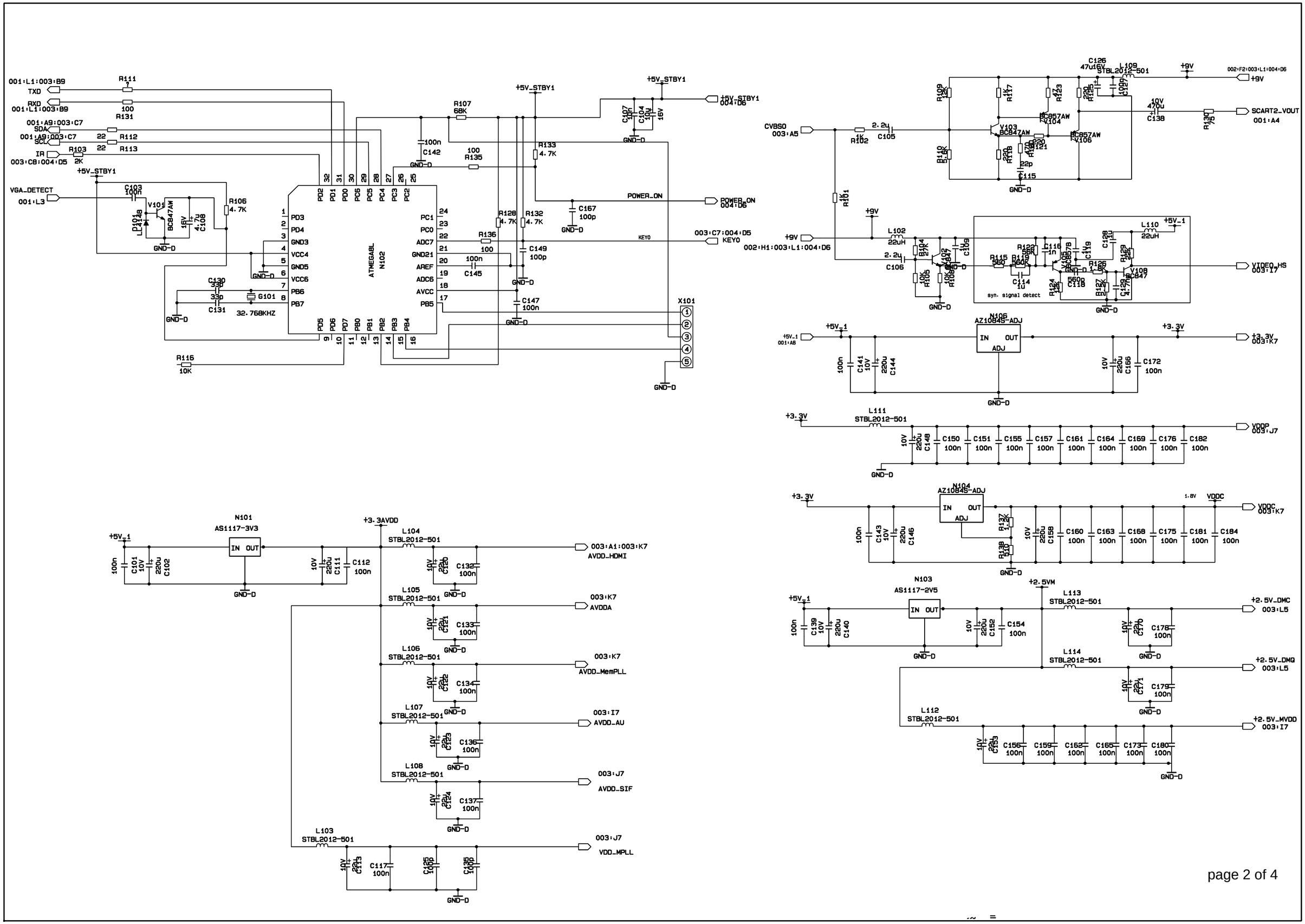

001:L1:003:B9
TXD
RXD
001:L1:003:B9
001:A9:003:C7
SDA
001:A9:003:C7
SCL
IR
003:C8:004:D5
VGA_DETECT
001:L3
+5V_STBY1
ATMEGA8L
N102
POWER_ON
004:D6
KEY0
003:C7:004:D5
X101
GND-D
CVBS0
003:A5
002:F2:003:L1:004:D6
SCART2_VOUT
001:A4
002:H1:003:L1:004:D6
VIDEO_HS
003:I7
syn. signal detect
N106
AZ1084S-ADJ
+5V_1
001:A8
+3.3V
003:K7
VDDP
003:J7
N104
AZ1084S-ADJ
VDDC
003:K7
N101
AS1117-3V3
+3.3AVDD
003:A1:003:K7
AVDD_HDMI
003:K7
AVDDA
003:K7
AVDD_MemPLL
003:I7
AVDD_AU
003:J7
AVDD_SIF
003:J7
VDD_MPLL
N103
AS1117-2V5
+2.5VM
+2.5V_DMC
003:L5
+2.5V_DMQ
003:L5
+2.5V_MVDD
003:I7

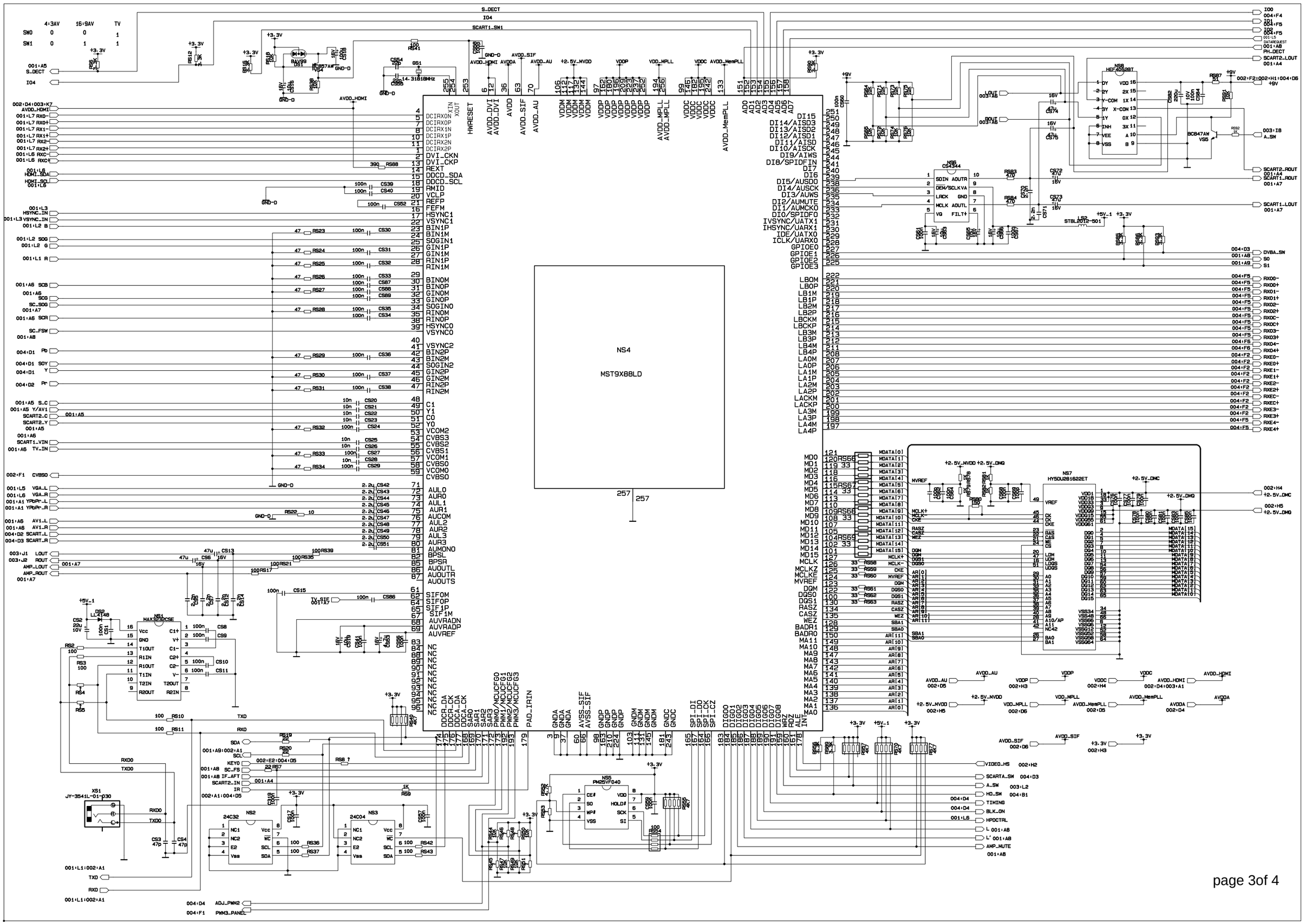
S_DECT
IO4
SCART1_SW1
NS4
MST9X88BLD
DCIRX0N XIN
DCIRX0P XOUT
DCIRX1N
DCIRX1P
DCIRX2N
DCIRX2P
DVI_CKN
DVI_CKP
REXT
DDCD_SDA
DDCD_SCL
RMID
VCLP
REFP
FEFM
HSYNC1
VSYNC1
BIN1P
BIN1M
SOGIN1
GIN1P
GIN1M
RIN1P
RIN1M
BINOM
BINOP
GINOM
GINOP
SOGIN0
RINOM
RINOP
HSYNC0
VSYNC0
VSYNC2
BIN2P
BIN2M
SOGIN2
GIN2P
GIN2M
RIN2P
RIN2M
C1
Y1
C0
Y0
VCOM2
CVBS3
CVBS2
CVBS1
VCOM1
CVBS0
VCOMO
CVBSO
AUL0
AUR0
AUL1
AUR1
AUCOM
AUL2
AUR2
AUL3
AUR3
AUMONO
BPSL
BPSR
AUOUTL
AUOUTR
AUOUTS
SIFIM
SIFOM
SIFOP
SIF1P
AUVRADN
AUVRADP
AUVREF
HWRESET
AVDD_DVI
AVDD
AVDD_SIF
AVDD_AU
VDDM
VDDP
VDDC
AVDD_MPLL
AVDD_MemPLL
DI15
DI14/AISD3
DI13/AISD2
DI12/AISD1
DI11/AISD
DI10/AISCK
DI9/AIWS
DI8/SPIDFIN
DI7
DI6
DI5/AUSDO
DI4/AUSCK
DI3/AUWS
DI2/AUMUTE
DI1/AUMCKO
DI0/SPIDFO
IVSYNC/UATX1
IHSYNC/UARX1
IDE/UATX0
ICLK/UARX0
GPIOE0
GPIOE1
GPIOE2
GPIOE3
LB0M
LB0P
LB1M
LB1P
LB2M
LB2P
LBCKM
LBCKP
LB3M
LB3P
LB4M
LB4P
LA0M
LA0P
LA1M
LA1P
LA2M
LA2P
LACKM
LACKP
LA3M
LA3P
LA4M
LA4P
MD0
MD1
MD2
MD3
MD4
MD5
MD6
MD7
MD8
MD9
MD10
MD11
MD12
MD13
MD14
MD15
MCLK
MCLKZ
MCLKE
MVREF
DQM
DQS0
DQS1
RASZ
CASZ
WEZ
BADR1
BADR0
MA11
MA10
MA9
MA8
MA7
MA6
MA5
MA4
MA3
MA2
MA1
MA0
PAD_IRIN
SPI_DI
SPI_DO
SPI_CK
SPI_CZ
DIGO0
DIGO1
DIGO2
DIGO3
DIGO4
DIGO5
DIGO6
DIGO7
DIGO8
WRZ
RDZ
ALE
IN
SW0
SW1
4:3AV
16:9AV
TV
S_DECT
IO4
SCART1_SW1
AVDD_HDMI
AVDD_DVI
AVDD_SIF
AVDD_AU
+2.5V_MVDD
VDDP
VDD_MPLL
VDDC
AVDD_MemPLL
HDMI_SDA
HDMI_SCL
HSYNC_IN
VSYNC_IN
SCB
SCG
SC_SDG
SCR
SC_FSW
Pb
SOY
Y
Pr
S_C
Y/AV1
SCART2_C
SCART2_Y
SCART1_VIN
TV_IN
CVBSO
VGA_L
VGA_R
YPbPr_L
YPbPr_R
AV1_L
AV1_R
SCART_L
SCART_R
LOUT
ROUT
AMP_LOUT
AMP_ROUT
TV_SIF
TXD
RXD
SDA
SCL
KEY0
SC_FS
IF_AFT
SCART2_IN
IR
ADJ_PWM2
PWM3_PANEL
VIDEO_HS
SCART_SW
A_SW
HD_SW
TIMING
BLK_ON
HPDCTRL
L
L'
AMP_MUTE
MDATA[0]
MDATA[1]
MDATA[2]
MDATA[3]
MDATA[4]
MDATA[5]
MDATA[6]
MDATA[7]
MDATA[8]
MDATA[9]
MDATA[10]
MDATA[11]
MDATA[12]
MDATA[13]
MDATA[14]
MDATA[15]
MCLK+
MCLK-
CKE
MVREF
DQM
DQS0
DQS1
RASZ
CASZ
WEZ
SBA1
SBA0
AR[11]
AR[10]
AR[9]
AR[8]
AR[7]
AR[6]
AR[5]
AR[4]
AR[3]
AR[2]
AR[1]
AR[0]
LOUT
ROUT
DVBA_SW
S0
S1
RXO0-
RXO0+
RXO1-
RXO1+
RXO2-
RXO2+
RXOC-
RXOC+
RXO3-
RXO3+
RXO4-
RXO4+
RXE0-
RXE0+
RXE1-
RXE1+
RXE2-
RXE2+
RXEC-
RXEC+
RXE3-
RXE3+
RXE4-
RXE4+
IO0
IO1
IO2
IO3
DATAREQUEST
PH_DECT
SCART2_LOUT
SCART2_ROUT
SCART1_ROUT
SCART1_LOUT
002:F2;002:H1;004:D6
003:I8
A_SW
002:H4
002:H5
+2.5V_DMC
+2.5V_DMQ
+5V
+3.3V
+5V_1
+2.5V_NVDD
+2.5V_DNQ
NS1 MAX3232CSE
NS2 24C32
NS3 24C04
NS5 PM25VF040
NS6 CS4344
NS7 HY5DU281622ET
NS8 HEF4052BT
LS2 STBL2012-501
BC847AM
XS1 JY-3541L-01-030
page 3of 4

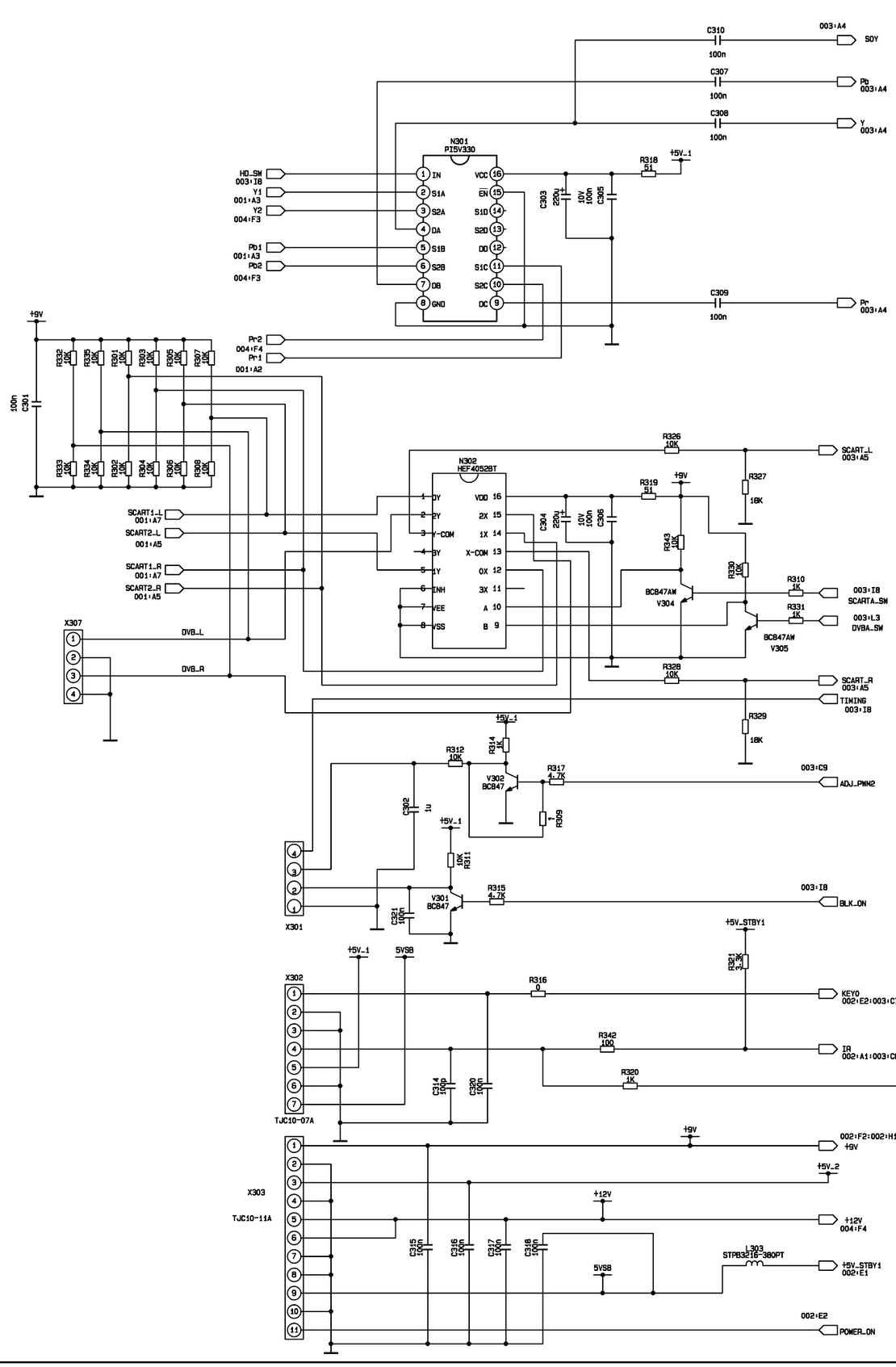
C310
100n
003:A4
SOY
C307
100n
Pb
003:A4
C308
100n
Y
003:A4
N301
PI5V330
HD_SW
003:I8
Y1
001:A3
Y2
004:F3
Pb1
001:A3
Pb2
004:F3
R318
51
+5V_1
C303
220n
10V
C305
100n
C309
100n
Pr
003:A4
Pr2
004:F4
Pr1
001:A2
+9V
C301
100n
R332
10K
R335
10K
R301
10K
R303
10K
R305
10K
R307
10K
R333
10K
R334
10K
R302
10K
R304
10K
R306
10K
R308
10K
SCART1_L
001:A7
SCART2_L
001:A5
SCART1_R
001:A7
SCART2_R
001:A5
X307
DVB_L
DVB_R
N302
HEF4052BT
R326
10K
SCART_L
003:A5
R319
51
+9V
R327
18K
C304
220n
10V
C306
100n
R343
10K
R330
10K
R310
1K
003:I8
SCART_SW
BC847AW
V304
R331
1K
003:L3
DVB_SW
BC847AW
V305
R328
10K
SCART_R
003:A5
TIMING
003:I8
R329
18K
+5V_1
R314
1K
R312
10K
V302
BC847
R317
4.7K
003:C9
ADJ_PWM2
R309
1
C302
1u
+5V_1
R311
10K
X301
C321
100n
R315
4.7K
003:I8
BLK_ON
V301
BC847
+5V_STBY1
R321
3K
+5V_1
5VSB
X302
R316
0
KEY0
002:E2:003:C7
R342
100
IR
002:A1:003:C8
R320
1K
C314
100n
C320
100n
TJC10-07A
+9V
002:F2:002:H1:003:L1
+9V
+5V_2
X303
+12V
TJC10-11A
+12V
004:F4
C315
100n
C316
100n
C317
100n
C318
100n
L303
STPB3216-380PT
5VSB
+5V_STBY1
002:E1
002:E2
POWER_ON
+5V_1
L301
STPB3216-380PT
+12V
L302
STPB3216-380PT
FOR THE 12V POWER PANEL
N303
AF49530
R324
47K
R325
4.7K
R322
R323
10K
PWM3_PANEL
003:C9
C311
100n
V303
BC847AW
C313
100u
10V
C312
100n
X304
DF14-30P-1.25H
RXE3+
003:L4
RXE3-
003:L4
RXEC+
003:L4
RXEC-
003:L4
RXE2+
003:L4
RXE2-
003:L4
RXE1+
003:L4
RXE1-
003:L4
RXE0+
003:L4
RXE0-
003:L4
VCC
GND
RX3+
RX3-
RXCLK+
RXCLK-
RX2+
RX2-
RX1+
RX1-
RX0+
RX0-
ODSEL2
ODSEL1
NC
RPF
+5V_1
22
R341
3.3K
R340
004:B1
Y2
004:B2
Pb2
004:B2
Pr2
R338
75
R337
75
R336
75
X305
IR_OUT
IO4
003:AD2
+12V
004:D6
IO0
003:L1
IO1
003:L1
IO2
003:L1
TJC10-09A
X306
FOR DVB READY
RXE4-
003:L4
RXE4+
003:L4
RXC0-
003:L3
RXC0+
003:L3
RXC1-
003:L3
RXC1+
003:L3
RXC2-
003:L3
RXC2+
003:L3
RXC-
003:L3
RXC+
003:L3
RX3-
003:L4
RX3+
003:L4
RX4-
003:L4
RX4+
003:L4
TP1
TP2
TP3
TP4
TP5
TP6
TP7
TP8
TP9
TP10
TP11
TP12
TP13
TP14

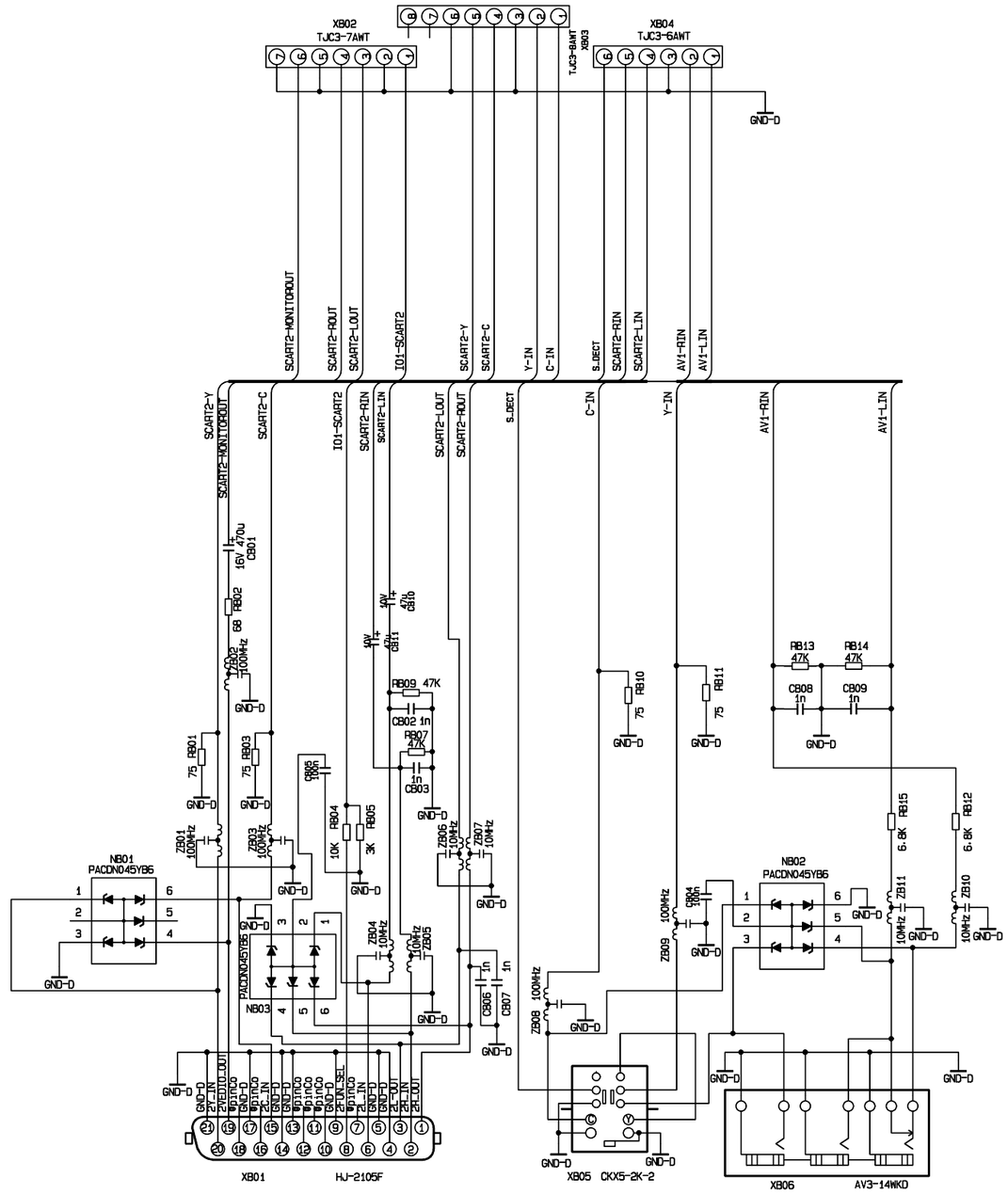

interface connector

A B C D E F

1

2

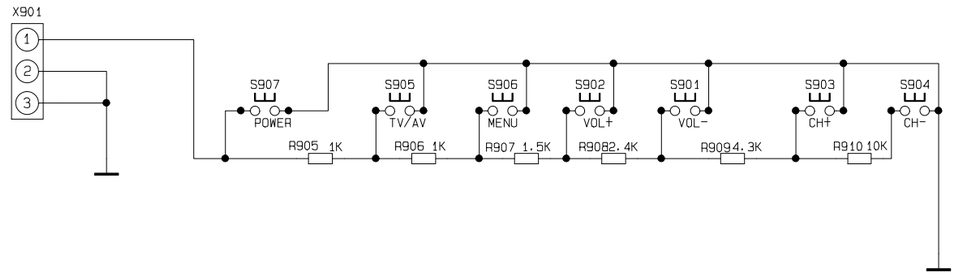

3

4

KEY board

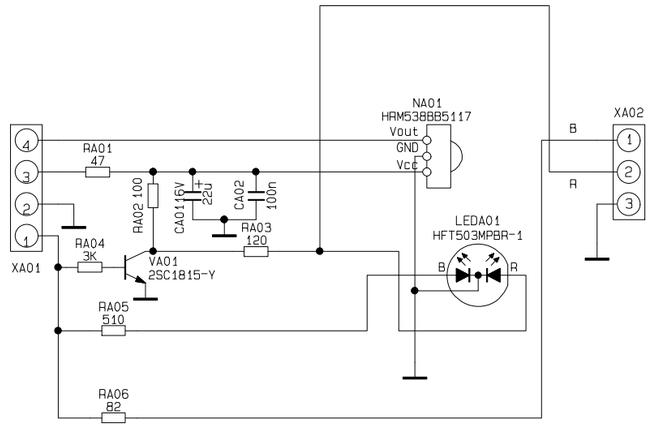

IR receiver board

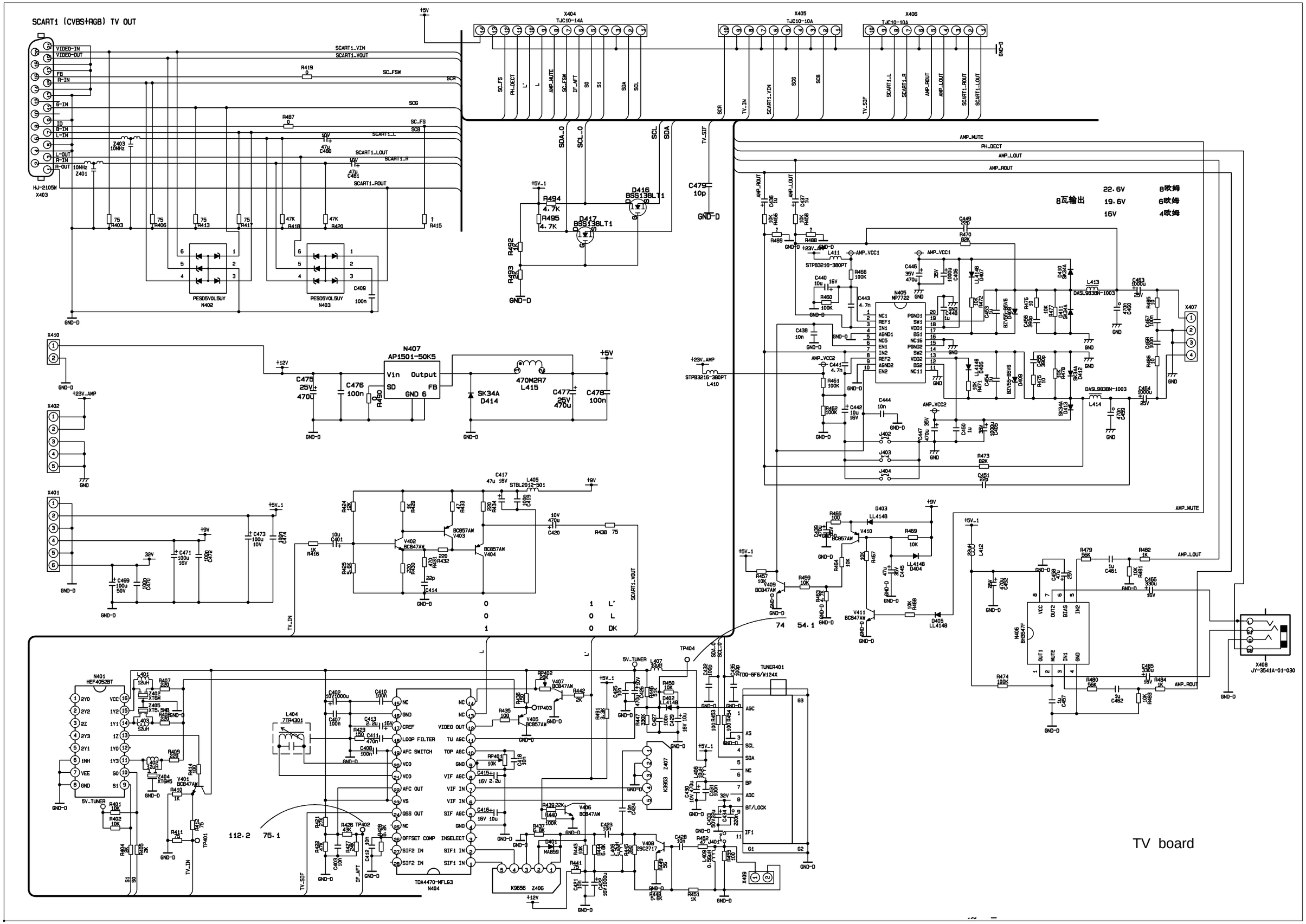
SCART1 (CVBS+RGB) TV OUT
HJ-2105W
X403
X404
TJC10-14A
X405
TJC10-10A
X406
TJC10-10A
N407
AP1501-50K5
N405
MP7722
N406
BH3547F
N401
HEF4052BT
N404
TDA4470-MFLG3
TUNER401
TDQ-6F6/W124X
X407
X408
JY-3541A-01-030
X409
X410
X402
X401
8瓦输出
22.6V
19.6V
16V
8欧姆
6欧姆
4欧姆
TV board

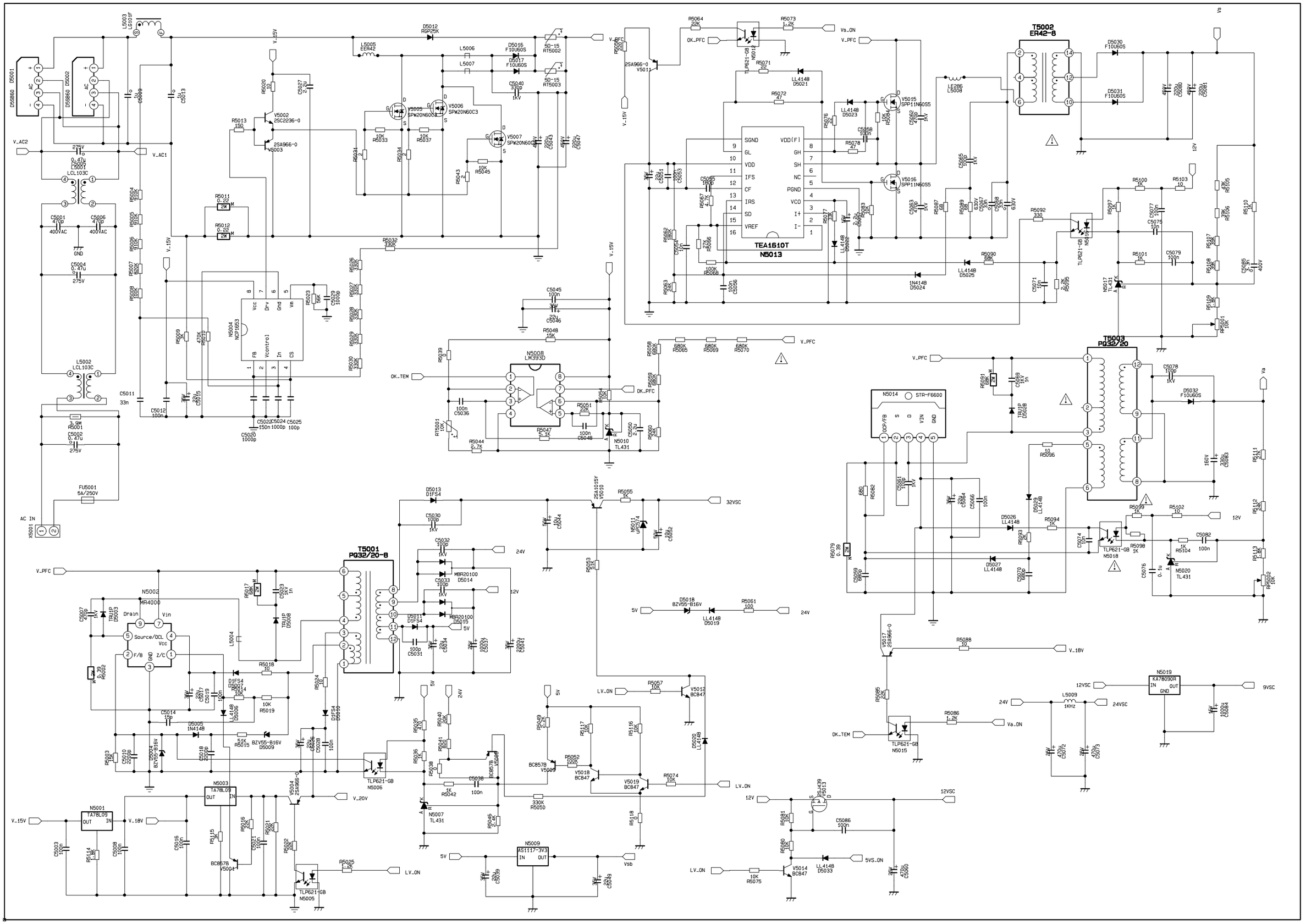
A
B
C
D
E
F
G
H
1
2
3
4
5
6
T5002
ER42-8
T5003
PQ32/20
T5001
PQ32/20-8
TEA1610T
N5013
N5014
STR-F6600
N5004
NCP1653
N5008
LM393D
N5010
TL431
N5007
TL431
N5017
TL431
N5020
TL431
N5001
TA78L09
N5002
MR4000
N5003
TA78L09
N5009
AS1117-3V3
N5019
KA78090R
N5018
TLP621-GB
N5015
TLP621-GB
N5006
TLP621-GB
N5005
TLP621-GB
N5016
TLR621-GB
V_AC2
V_AC1
V_15V
V_PFC
V_18V
V_20V
V_1BV
Vs
Va
Vsb
Vs_ON
Va_ON
OK_PFC
OK_TEM
LV_ON
5VS_ON
AC IN
FU5001
5A/250V
X5001
L5003
LG101F
L5001
LCL103C
L5002
LCL103C
L5004
L5005
EE42
L5006
L5007
L5008
LE286
L5009
1KHz
D5012
RGP25K
D5013
D1FS4
D5030
F10U60S
D5031
F10U60S
D5032
F10U60S
D5033
D1FS4
D5034
MBR20100
D5035
MBR20100
D5036
MBR20100
D5037
D1FS4
D5038
D1FS4
D5039
D1FS4
D5040
D1FS4
D5041
D1FS4
D5042
D1FS4
D5043
D1FS4
D5044
D1FS4
D5045
D1FS4
D5046
D1FS4
D5047
D1FS4
D5048
D1FS4
D5049
D1FS4
D5050
D1FS4
D5051
D1FS4
D5052
D1FS4
D5053
D1FS4
D5054
D1FS4
D5055
D1FS4
D5056
D1FS4

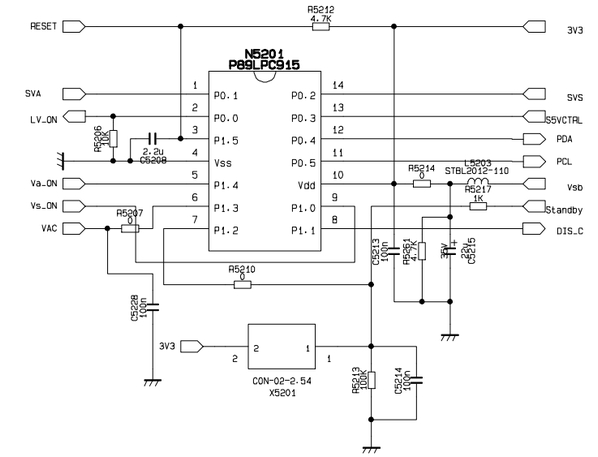
N5201
P89LPC915
RESET
SVA
LV_ON
Va_ON
Vs_ON
VAC
3V3
SVS
S5VCTRL
PDA
PCL
Vsb
Standby
DIS_C
R5212 4.7K
R5206 10K
C5208 2.2u
R5214 0
L5203 STBL2012-110
R5217 1K
R5207 0
R5210 0
C5213 100n
R5561 475K
C5215 47u
C5228 100n
R5213 10K
C5214 100n
CON-02-2.54
X5201

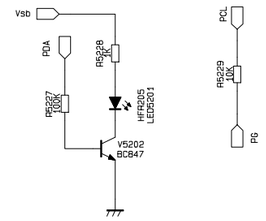
Vsb
PDA
R5228 2K
R5227 100K
HER205
LED201
V5202
BC847
PCL
R5229 10K
PG

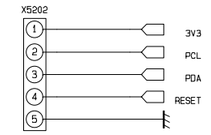
X5202
3V3
PCL
PDA
RESET

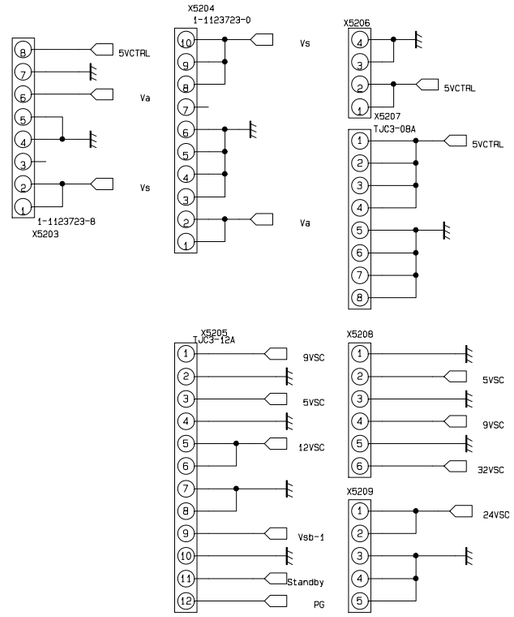
X5204
1-1123723-0
X5203
1-1123723-8
5VCTRL
Va
Vs
X5206
X5207
TJC3-08A
X5205
TJC3-12A
X5208
9VSC
5VSC
12VSC
32VSC
X5209
24VSC
Vsb-1
Standby
PG

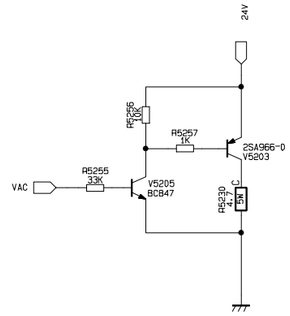
24V
R5256 10K
R5257 1K
2SA966-0
V5203
VAC
R5255 33K
V5205
BC847
R5230 4.7 5W

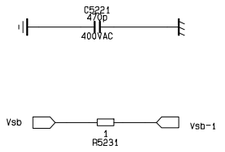
C5221 470p
400VAC
Vsb
Vsb-1
R5231 1

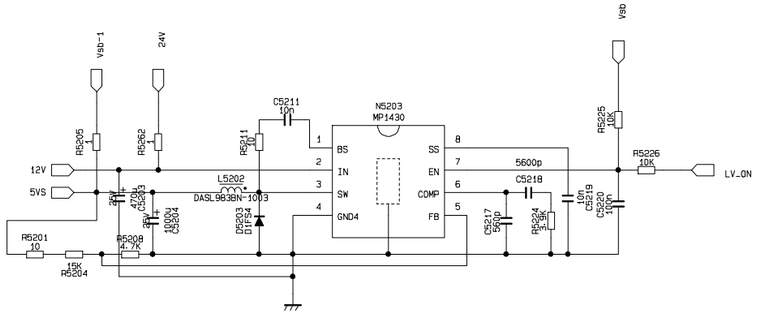
Vsb-1
24V
Vsb
N5203
MP1430
C5211 10n
R5205 1
R5562 1
R5211 10
R5225 10K
R5226 10K
LV_ON
12V
5VS
L5202
DASL983BN-1013
C5218 5600p
C5217 560p
R5534 47K
C5219 10n
C5220 100n
R5201 10
R5208 4.7K
R5204 15R
R5203 DFS34
C5203 470u
C5204 100n
C5202 100n

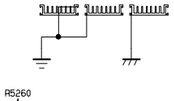

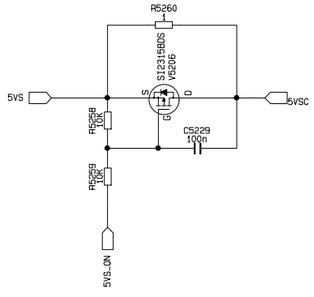
R5260 1
SI2315BDS
V5206
5VS
5VSC
R5258 10K
R5259 10K
C5229 100n
5VS_ON

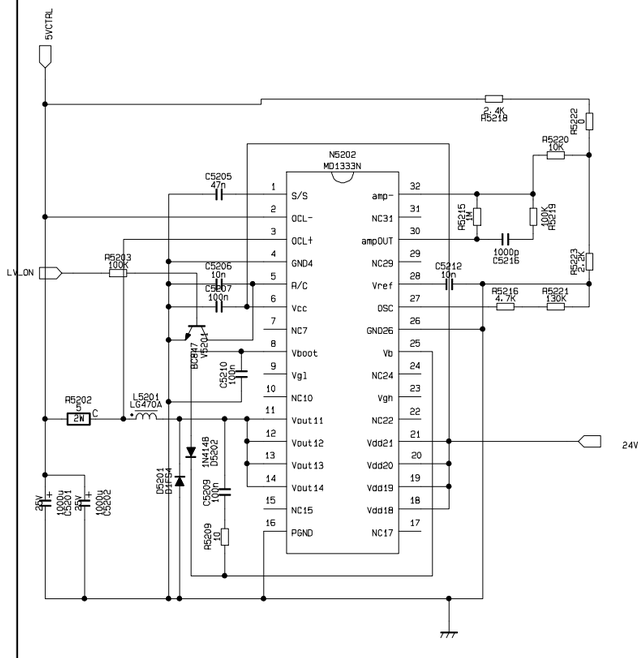
5VCTRL
N5202
MD1333N
R5218 2.4K
R5222 0
R5220 10K
C5205 47n
R5215 1M
R5219 100K
1000p C5216
R5223 2.2K
LV_ON
R5203 100K
C5206 10n
C5207 100n
R5216 4.7K
R5221 130K
S/S
QCL-
QCL+
GND4
A/C
Vcc
NC7
Vboot
Vgl
NC10
Vout11
Vout12
Vout13
Vout14
NC15
PGND
amp-
NC31
ampOUT
NC29
Vref
OSC
GND26
Vb
NC24
Vgh
NC22
Vdd21
Vdd20
Vdd19
Vdd18
NC17
V5201
BCR47
C5210 100n
R5202 5 2W
L5201 LG470A
24V
C5201 470u
C5204 100n
C5202 100n
D5201 DFS34
D5202 1N4148
C5209 100n
R5209 10

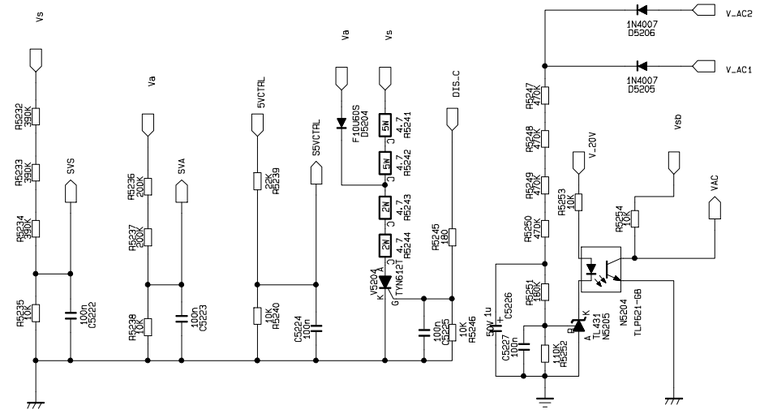
Vs
Va
5VCTRL
S5VCTRL
D15_C
V_AC2
V_AC1
1N4007
D5206
1N4007
D5205
R5232 390K
R5233 390K
R5234 390K
R5235 10K
R5236 200K
R5237 200K
R5238 10K
R5239 10K
R5240 10K
R5241 4.7 5W
R5242 4.7 5W
R5243 4.7 2W
R5244 4.7 2W
R5245 18K
R5246 10K
C5222 100n
C5223 100n
C5224 100n
C5225 100n
C5226 100n
C5227 100n
R5247 470K
R5248 470K
R5249 470K
R5250 470K
R5251 180K
R5252 10K
R5253 10K
R5254 10K
V_20V
Vsb
VAC
V5204
TLP621-4B
N5204
TLP621-4B

APPENDIX-A: Main assembly PDP-50XR7

NAME	NO.	MAIN COMPONENT AND IT'S NO.	
Analog board	XI6HU0515310	N404 N405	TDA4470MFL (5274470001) MP7722DF (5277722001)
Main board	XI6HU0580110	NS4	MST9E88L (5270988002)
Indicator light board	XI6LT0251410		
Interface connection board	XI6HU0512910		
Key board	XI6HU0530510		
Power filter board	XI6FK0105110		
Power board	XI6HU0532010		
Remote control	XI6010Y03507	RC-Y35-0F	
Panel	XI5205503204	PDP50X4P	

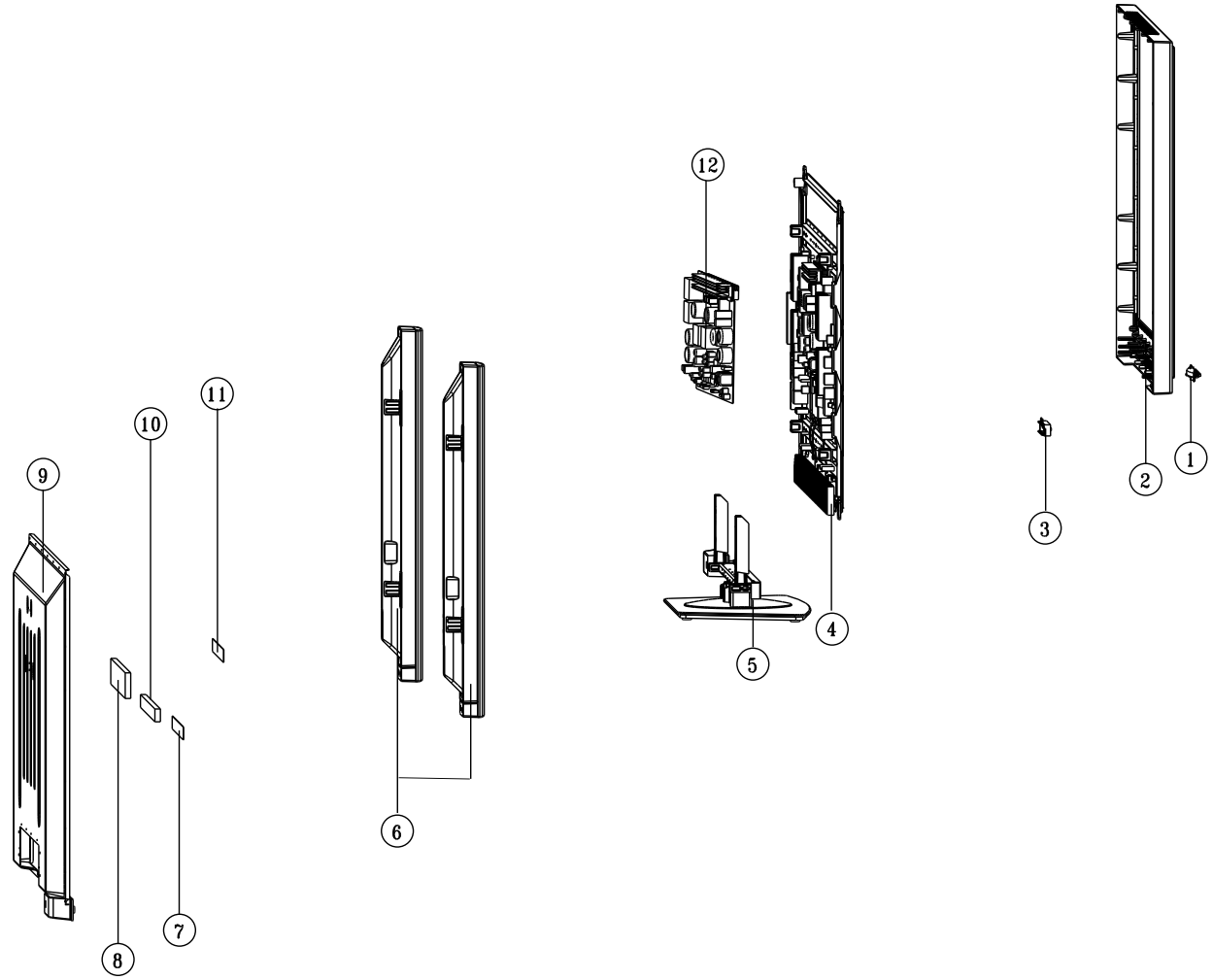
1
2
3
4
5
6
7
8
9
10
11
12

PART LIST OF EXPLODED VIEW

NO.	DESCRIPTION
1	Indicator light board
2	Front cabinet
3	Key board
4	Panel
5	Stand
6	Speaker
7	Interface connection board
8	Main board
9	Back cabinet
10	Analog board
11	Power filter board
12	Power board
13	User manual
14	Remote control

PART LIST

PDP-50XR7 ver.1.0

REF.No.	PARTS No.	DESCRIPION	Q'TY	REMARK
1	XI6LT0251410	Indicator light board	1	
2	XI66S18R032E	Front cabinet	1	
3	XI6HU0530510	Key board	1	
4	———	Panel	1	LG PDP50X4P
5	XI6371285020	Stand	1	
6	XI6170712020	Speaker	1	
7	XI6HU0512910	Interface connection board	1	
8	XI6HU0580110	Main board	1	
9	XI5HS31RI010	Back cabinet	1	
10	XI6HU0515310	Analog board	1	
11	XI6FK0105110	Power filter board	1	
12	XI6HU0532010	Power board	1	
13	XI594403175A	User manual	1	
14	XI6010Y03507	Remote control	1	

- Only the parts in above list are used for repairing.
- Other parts except the above parts can't be supplied.

Apr/2008

SANYO Electric Co., Ltd.