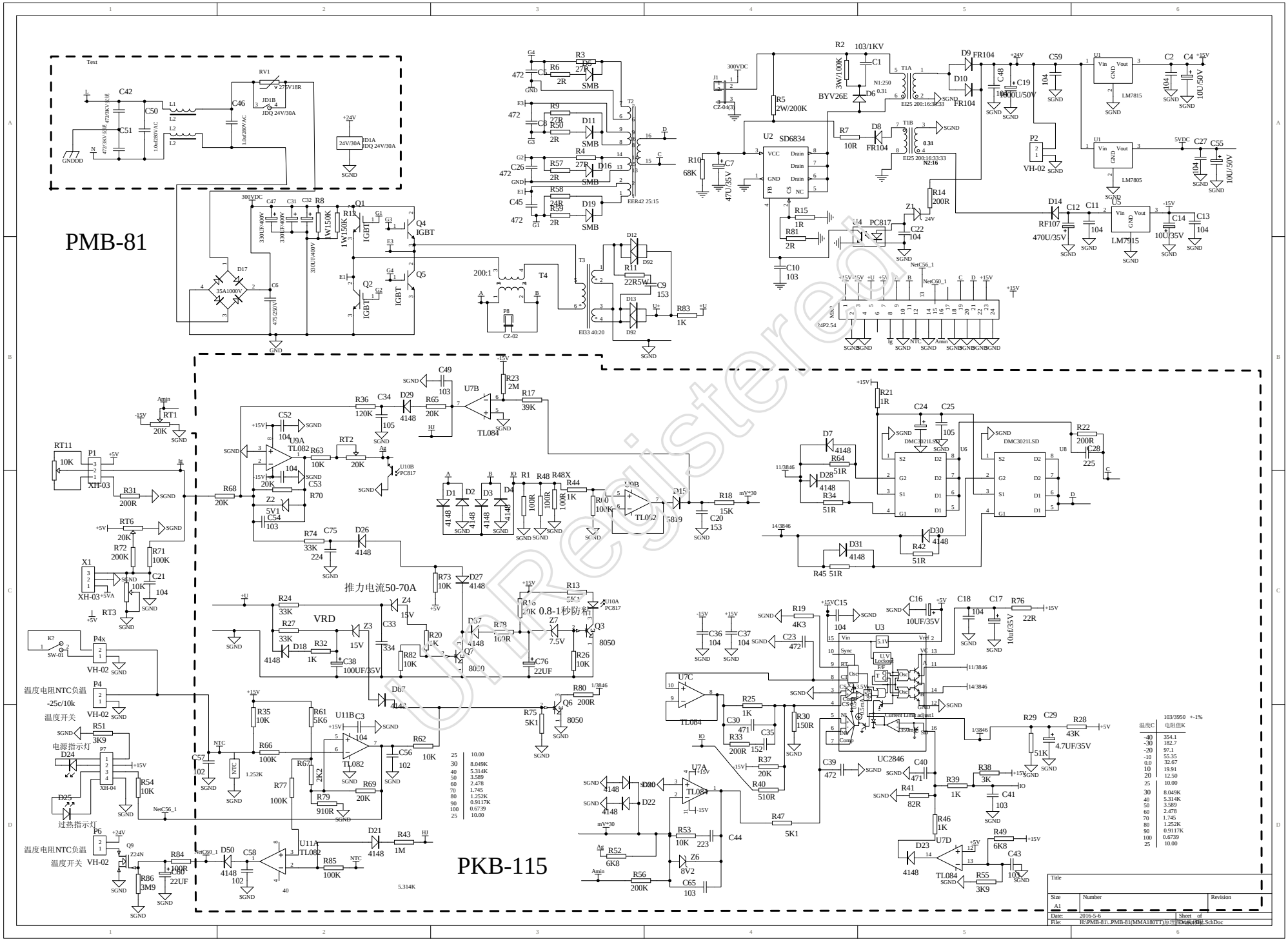

25	10.00
30	8.049K
40	5.314K
50	3.589
60	2.478
70	1.745
80	1.252K
90	0.9117K
100	0.6739
25	10.00

温度C	103/3950 +-1% 电阻值K
-40	354.1
-30	182.7
-20	97.1
-10	55.35
0.0	32.67
10	19.91
20	12.50
25	10.00
30	8.049K
40	5.314K
50	3.589
60	2.478
70	1.745
80	1.252K
90	0.9117K
100	0.6739
25	10.00

UnRegistered