11-1 Power Drive

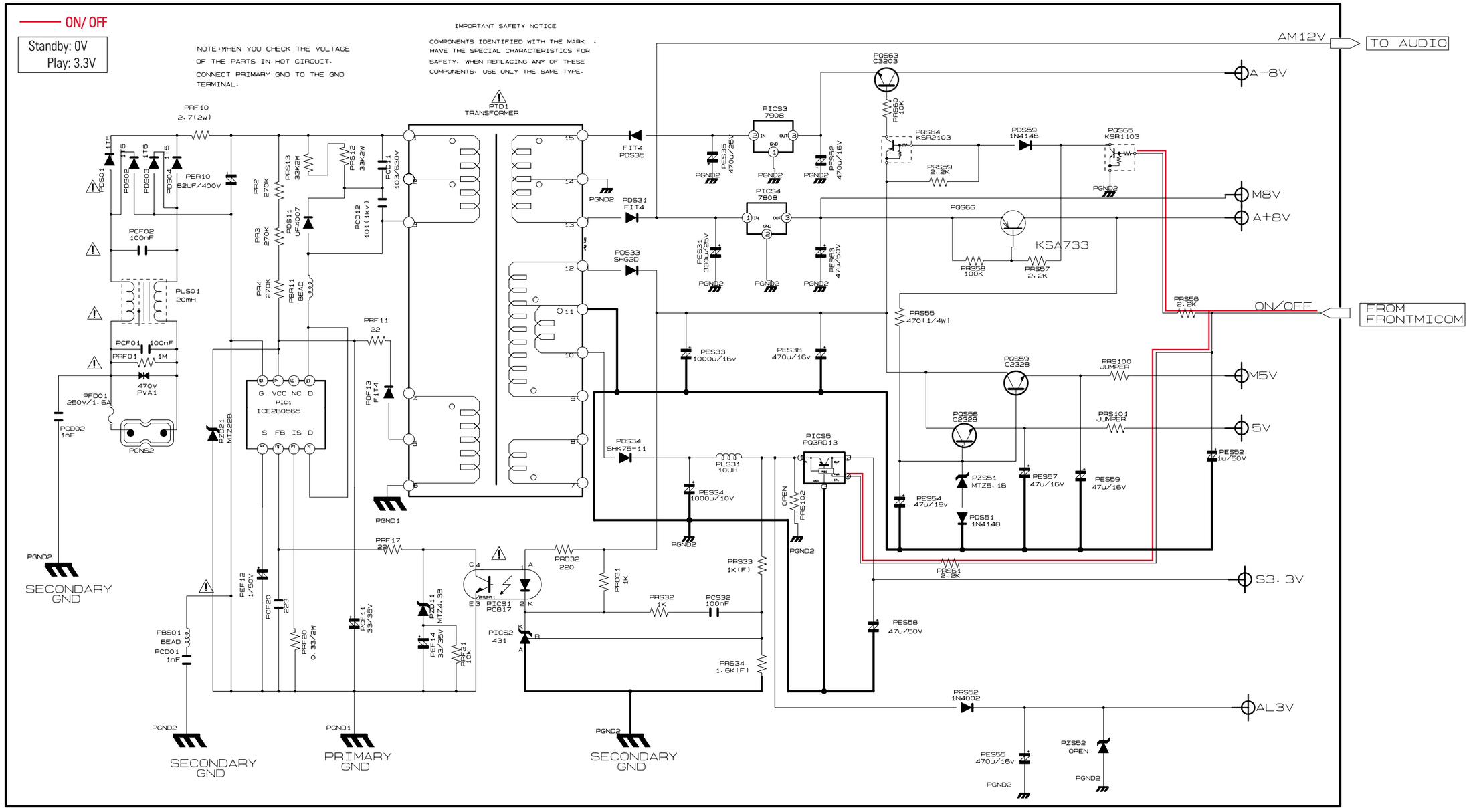

This Document can not be used without Samsung's authorization.