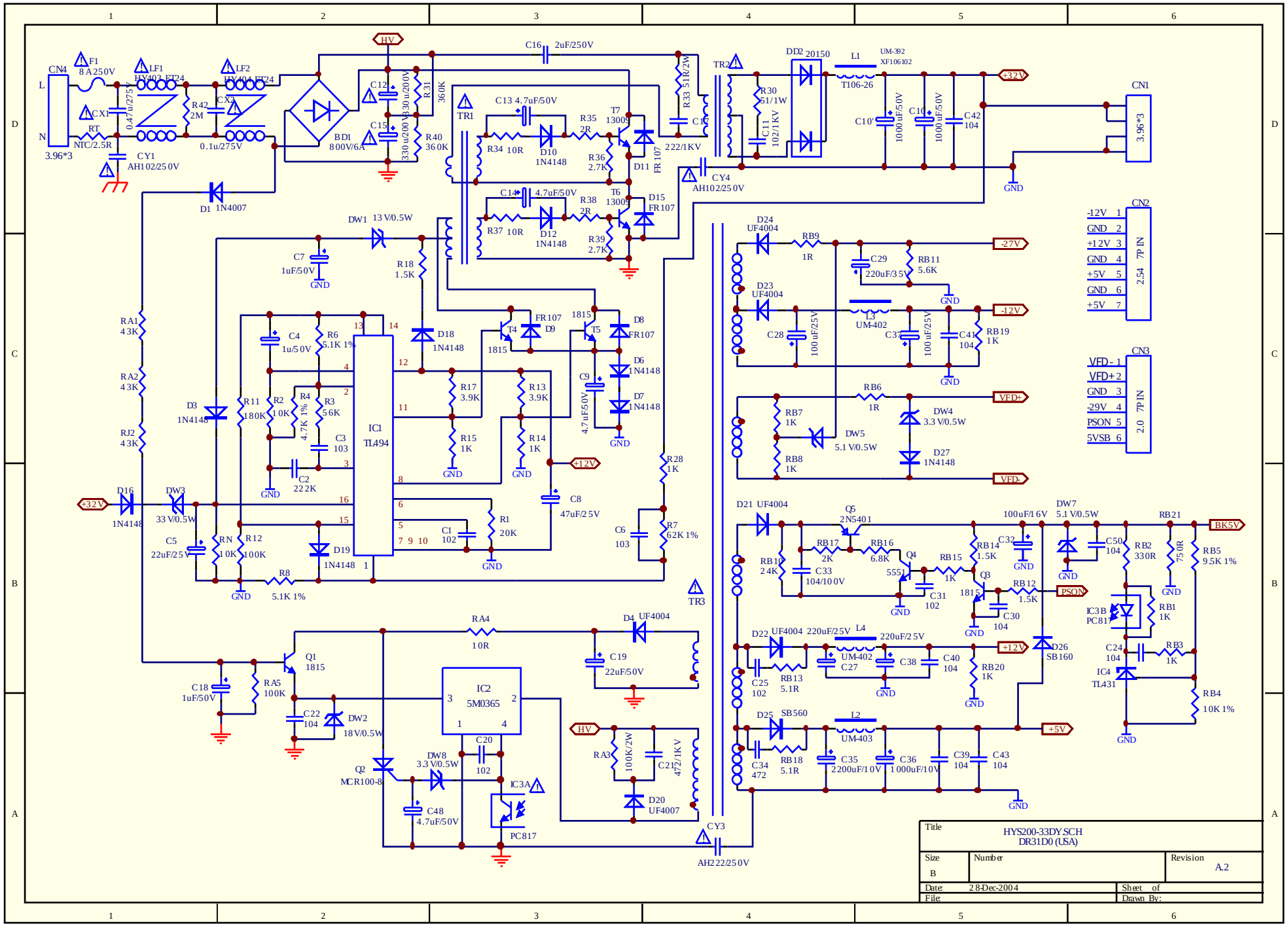

Create PDF with GO2PDF for free, if you wish to remove this line, click here to buy Virtual PDF Printer