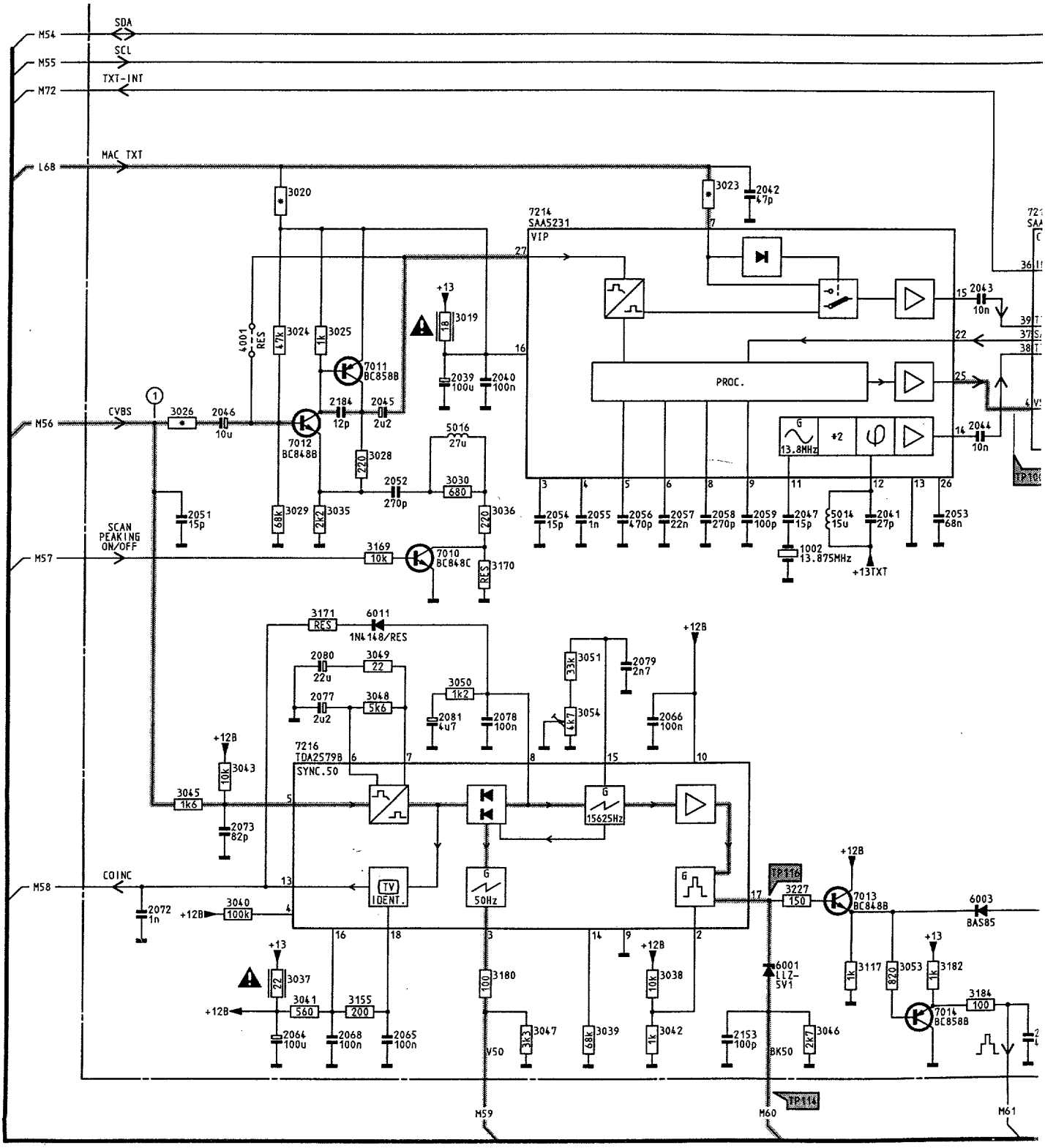
M54
SDA
M55
SCL
M72
TXT-INT
L68
MAC TXT
M56
CVBS
M57
SCAN PEAKING ON/OFF
M58
COINC
M59
M60
M61
7214 SAA5231
VIP
PROC.
13.8MHz
7216 TDA2579B
SYNC.50
15625Hz
50Hz
TV IDENT.
1002 13.875MHz
+13TXT
7011 BC858B
7012 BC848B
7010 BC848C
7013 BC848B
7014 BC858B
6001 LLZ-5V1
6003 BAS85
1N4148/RES
TP116
TP114