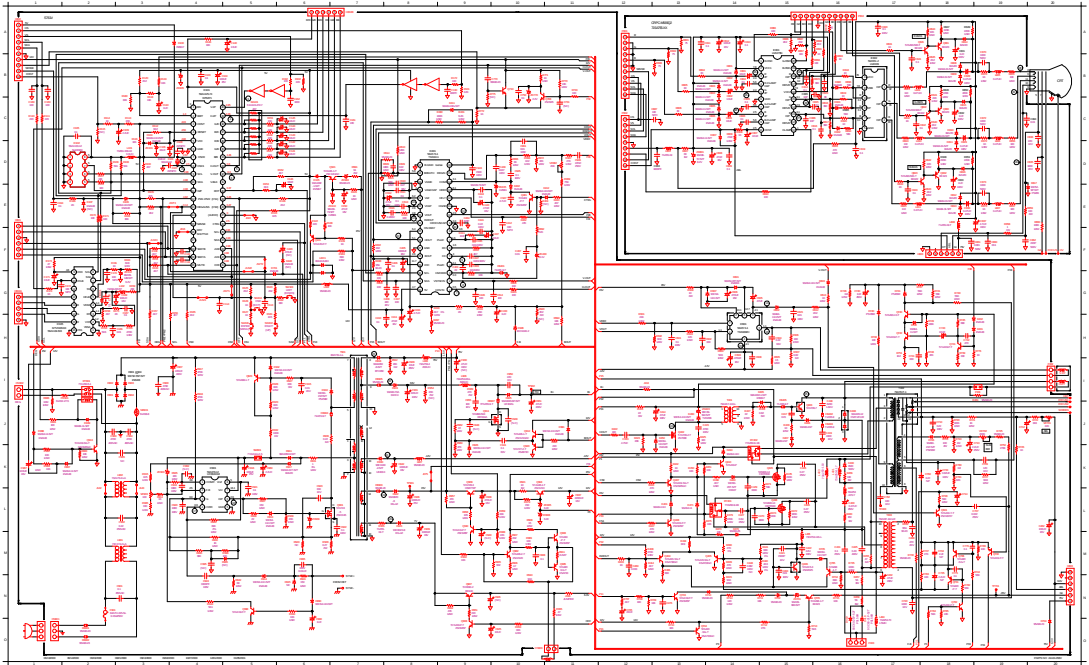

| | | | |
|---|---|---|---|
| MODE | D3B04C6R0/S (S781V-P/F) | DRAWING | |
| P/N | S781V-01-A | CHECKED | |
| DATE | 01-19-2001 | APPROVED | |

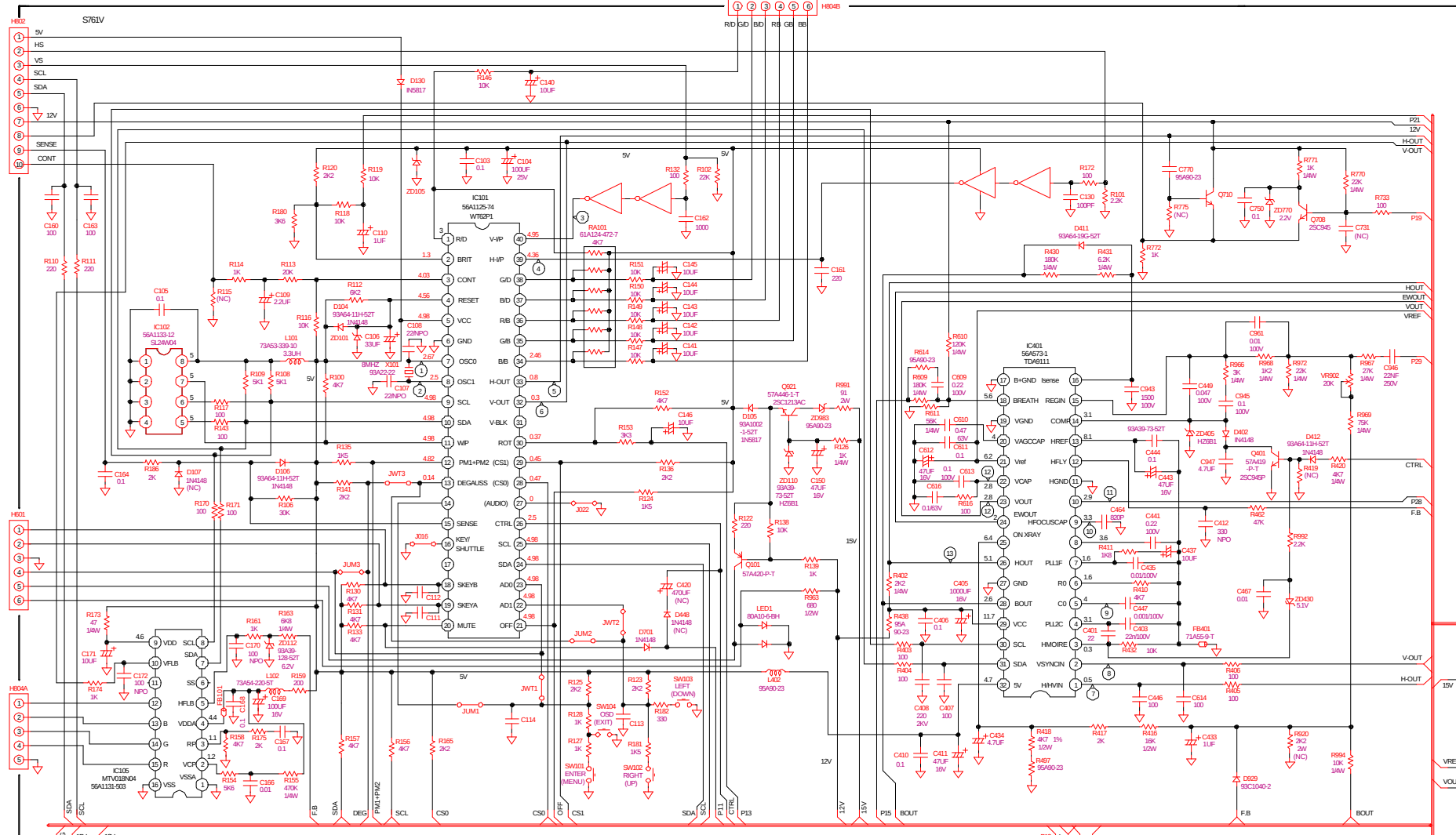
S761V
H802
5V
HS
VS
SCL
SDA
12V
SENSE
CONT
H804B
R/D G/D B/D R/B G/B B/B
H804A
H601
IC101
56A1125-74
WT62P1
R/D
BRIT
CONT
RESET
VCC
GND
OSC0
OSC1
SCL
SDA
WP
PM1+PM2 (CS1)
DEGAUSS (CS0)
(AUDIO)
SENSE
CTRL
KEY/ SHUTTLE
SCL
SDA
SKEYB
SKEYA
MUTE
V-I/P
H-I/P
G/D
B/D
R/B
G/B
B/B
H-OUT
V-OUT
V-BLK
ROT
OFF
IC401
56A573-1
TDA8111
B+GND Isense
BREATH
VGND
VAGCCAP
Vref
VCAP
VOUT
EWOUT
HFOCUSCAP
ON XRAY
HOUT
GND
BOUT
VCC
SCL
SDA
5V
REGIN
COMP
HREF
HFLY
HGND
VSYNCIN
HMOIRE
H/HVIN
PLL1F
R0
C0
PLL2C
IC102
56A1133-12
SL24W04
IC105
MTV018N04
56A1131-503
P21
12V
H-OUT
V-OUT
P19
HOUT
EWOUT
VOUT
VREF
P29
F.B
CTRL
P28
V-OUT
H-OUT
15V
VREF
VOUT
SDA
SCL
F.B
DEG
PM1+PM2
CS0
CS1
OFF
P11
P13
P15
BOUT

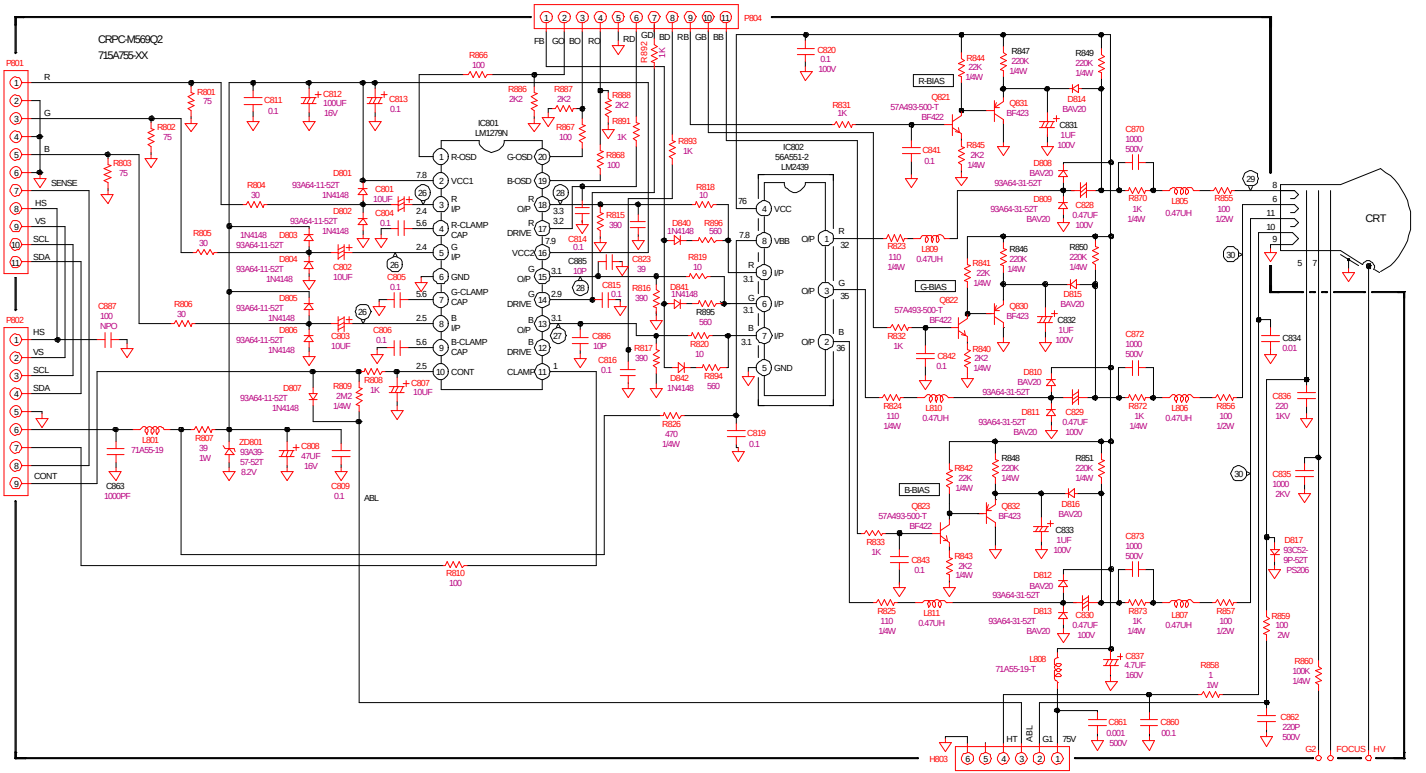
CRPC-M569Q2
715A755-XX
P801
P802
P804
H803
IC801
LM1279N
IC802
56A551-2
LM2439
R-OSD
VCC1
R IIP
R-CLAMP CAP
G IIP
GND
G-CLAMP CAP
B IIP
B-CLAMP CAP
CONT
G-OSD
B-OSD
OIP
DRIVE
VCCX
CLAMP
VCC
VBB
IIP
GND
R-BIAS
G-BIAS
B-BIAS
CRT
HT
ABL
G1
75V
G2
FOCUS
HV
R
G
B
SENSE
HS
VS
SCL
SDA
CONT
FB
GC
BO
RO
RD
GD
BD
RB
GB
BB

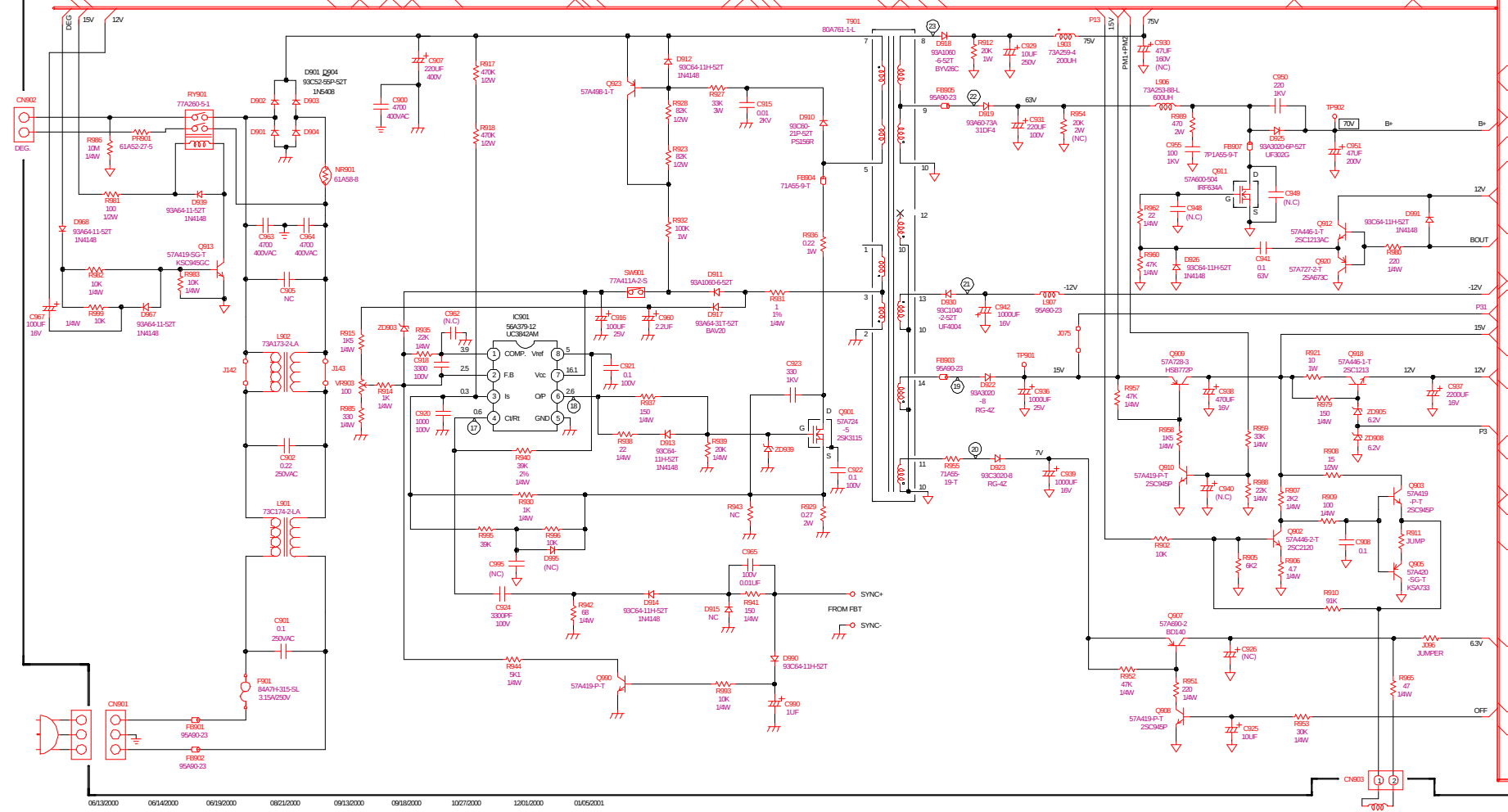
CN902
DEG.
DEG
15V
12V
RY901
77A260-5-1
PR901
61AS2-27-5
R986
10M
1/4W
R981
100
1/2W
D968
93A64-11-52T
1N4148
D939
93A64-11-52T
1N4148
Q913
57A419-SG-T
KSC945GC
R982
10K
1/4W
R983
10K
1/4W
C967
100UF
16V
R999
10K
1/4W
D967
93A64-11-52T
1N4148
D901 D904
93C52-55P-52T
1N5408
D902
D903
D901
D904
NR901
61AS8-8
C907
220UF
400V
C900
4700
400VAC
R917
470K
1/2W
R918
470K
1/2W
C963
4700
400VAC
C964
4700
400VAC
C905
NC
L902
73A173-2-LA
J142
J143
VR903
100
R914
1K
1/4W
R915
1K5
1/4W
R985
330
1/4W
C902
0.22
250VAC
L901
73C174-2-LA
C901
0.1
250VAC
F901
84A7H-315-SL
3.15A/250V
CN901
FB901
95A90-23
FB902
95A90-23
D912
93C64-11H-52T
1N4148
Q923
57A498-1-T
R928
82K
1/2W
R923
82K
1/2W
R927
33K
3W
C915
0.01
2KV
D910
93C90-
21P-52T
PS156R
R932
100K
1W
FB904
71A55-9-T
R936
0.22
1W
SW601
77A411A-2-S
D911
93A1060-6-52T
R931
1
1%
1/4W
D917
93A64-31T-52T
BAV20
C916
100UF
25V
C960
2.2UF
IC901
56A379-12
UC3842AM
COMP.
Vref
F.B
Vcc
Is
OIP
Ct/Rt
GND
ZD903
C962
(N.C)
R935
22K
1/4W
C918
3300
100V
C920
1000
100V
R940
39K
2%
1/4W
R930
1K
1/4W
R925
39K
R936
10K
D995
(NC)
C995
(NC)
C924
3300PF
100V
R942
68
1/4W
D914
93C64-11H-52T
1N4148
R937
150
1/4W
R938
22
1/4W
D913
93C64-
11H-52T
1N4148
R939
20K
1/4W
C921
0.1
100V
C923
330
1KV
ZD939
Q901
57A724
-5
2SK3115
C922
0.1
100V
R943
NC
R929
0.27
2W
C965
100V
0.01UF
R941
150
1/4W
D915
NC
D990
93C64-11H-52T
R944
5K1
1/4W
Q990
57A419-P-T
R993
10K
1/4W
C990
1UF
SYNC+
FROM FBT
SYNC-
T901
80A761-1-L
D918
93A1060
-6-52T
BYV26C
R912
20K
1W
C929
10UF
250V
L903
73A259-4
200UH
C930
47UF
160V
(NC)
FB905
95A90-23
D919
93A60-73A
31DF4
C931
220UF
100V
R954
20K
2W
(NC)
L906
73A253-88-L
600UH
R989
470
2W
C955
100
1KV
C950
220
1KV
TP902
70V
B+
FB907
7P1A55-9-T
D925
93A3030-6P-52T
UF302G
C951
47UF
200V
Q911
57A600-504
IRF634A
C949
(N.C)
C948
(N.C)
R962
22
1/4W
D926
93C64-11H-52T
1N4148
C941
0.1
63V
R960
47K
1/4W
Q912
57A446-1-T
2SC1213AC
D991
93C64-11H-52T
1N4148
R980
220
1/4W
Q920
57A727-2-T
2SA673C
BOUT
12V
-12V
D930
93C1040
-2-52T
UF4004
C942
1000UF
16V
L907
95A90-23
J075
P31
15V
FB903
95A90-23
D922
93A3020
-8
RG-4Z
TP901
C936
1000UF
25V
Q909
57A728-3
HSB772P
R957
47K
1/4W
C938
470UF
16V
R921
10
1W
Q918
57A446-1-T
2SC1213
R979
150
1/4W
ZD905
6.2V
ZD908
6.2V
C937
2200UF
16V
P3
R958
1K5
1/4W
R959
33K
1/4W
R908
15
1/2W
R955
71A55-
19-T
D923
93C3020-8
RG-4Z
7V
C939
1000UF
16V
Q910
57A419-P-T
2SC945P
C940
(N.C)
R988
22K
1/4W
R907
2K2
1/4W
R909
100
1/4W
Q903
57A419
-P-T
2SC945P
R902
10K
Q902
57A446-2-T
2SC2120
R905
6K2
R906
4.7
1/4W
C908
0.1
R911
JUMP
Q905
57A420
-SG-T
KSA733
R910
91K
Q907
57A690-2
BD140
C926
(NC)
J096
JUMPER
6.3V
R952
47K
1/4W
R951
220
1/4W
R965
47
1/4W
Q908
57A419-P-T
2SC945P
C925
10UF
R953
30K
1/4W
OFF
CN903
06/13/2000
06/14/2000
06/19/2000
08/21/2000
09/13/2000
09/18/2000
10/27/2000
12/01/2000
01/05/2001

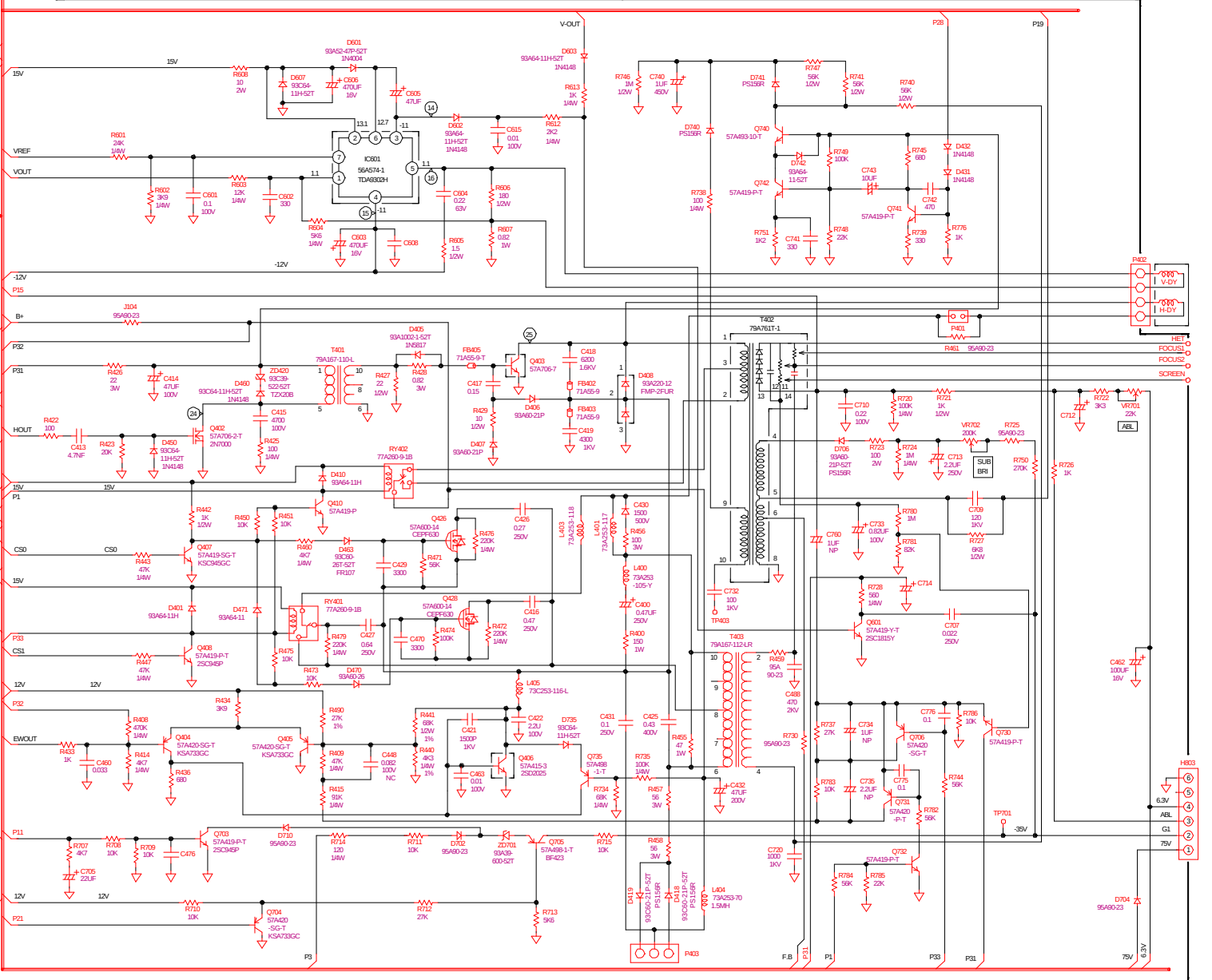
V-OUT
15V
VREF
VOUT
-12V
P15
B+
P32
P31
HOUT
P1
CS0
P33
CS1
12V
EWOUT
P11
P21
IC601
56A574-1
TDA9302H
T401
79A167-110-L
T402
79A761T-1
T403
79A167-112-LR
Q402
57A706-2-T
2N7000
Q403
57A706-7
Q404
57A420-SG-T
KSA733GC
Q405
57A420-SG-T
KSA733GC
Q406
57A415-3
2SD2025
Q407
57A419-SG-T
KSC945GC
Q408
57A419-P-T
2SC945P
Q410
57A419-P
Q426
57A600-14
CEFF630
Q428
57A600-14
CEFF630
Q601
57A419-Y-T
2SC1815Y
Q703
57A419-P-T
2SC945P
Q704
57A420
-SG-T
KSA733GC
Q705
57A498-1-T
BF423
Q706
57A420
-SG-T
Q731
57A420
-P-T
Q732
57A419-P-T
Q735
57A498
-1-T
Q740
57A493-10-T
Q741
57A419-P-T
Q742
57A419-P-T
RY401
77A260-9-1B
RY402
77A260-9-1B
P402
V-DY
H-DY
P401
HET
FOCUS1
FOCUS2
SCREEN
ABL
SUB
BRI
H803
6.3V
ABL
G1
75V
-35V
TP403
TP701
P403
F.B
P31
P1
P33
P31
75V
6.3V