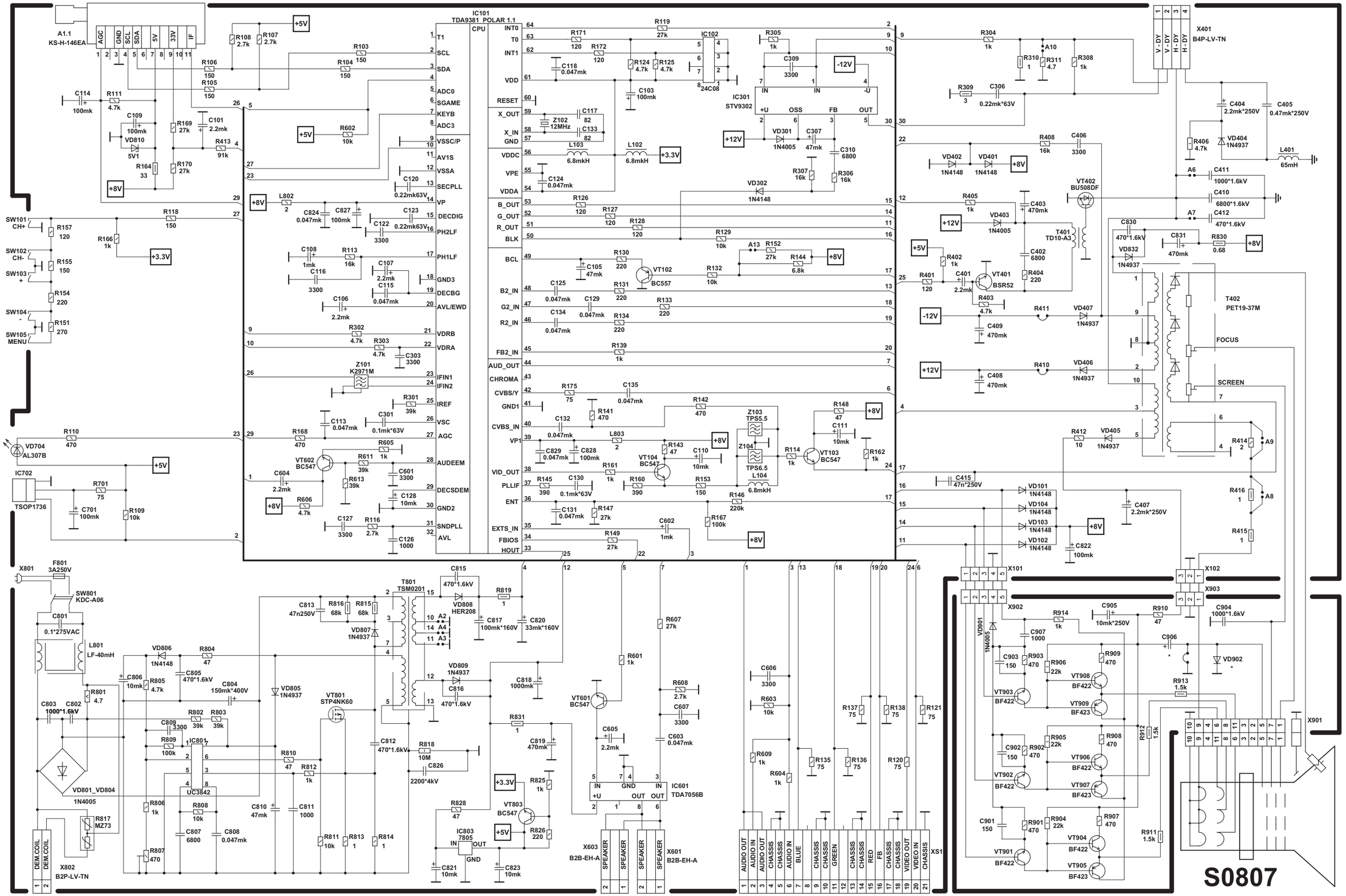

A1.1
KS-H-146EA
IC101
TDA9381 POLAR 1.1
CPU
IC102
24C08
IC301
STV9302
X401
B4P-LV-TN
T402
PET19-37M
FOCUS
SCREEN
T801
TSM0201
IC801
UC3842
IC601
TDA7056B
IC803
7805
X801
F801
3A250V
SW801
KDC-A06
L801
LF-40mH
X802
B2P-LV-TN
X603
B2B-EH-A
X601
B2B-EH-A
X101
X902
X102
X903
X901
XS1
S0807