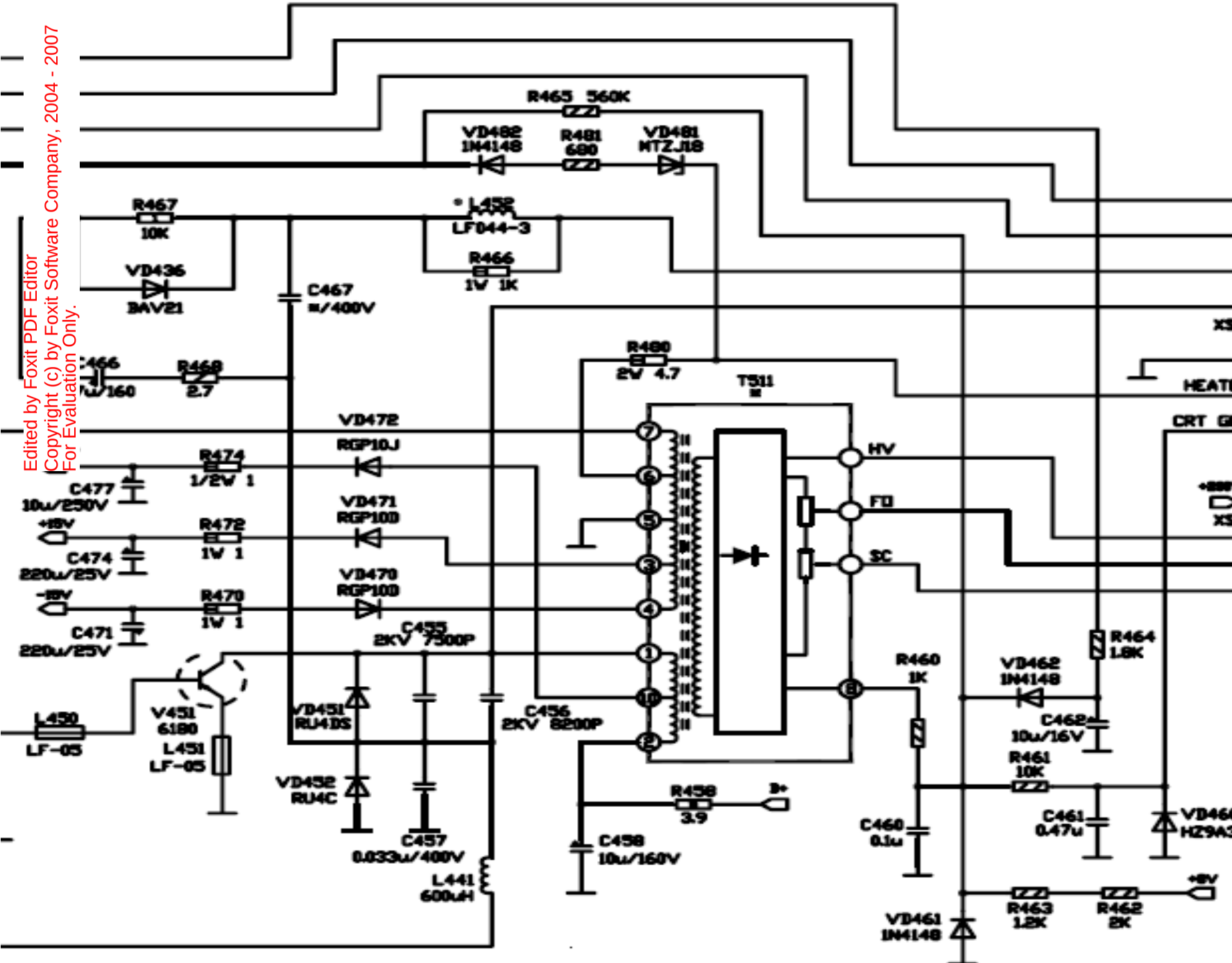Edited by Foxit PDF Editor
Copyright (c) by Foxit Software Company, 2004 - 2007
For Evaluation Only.