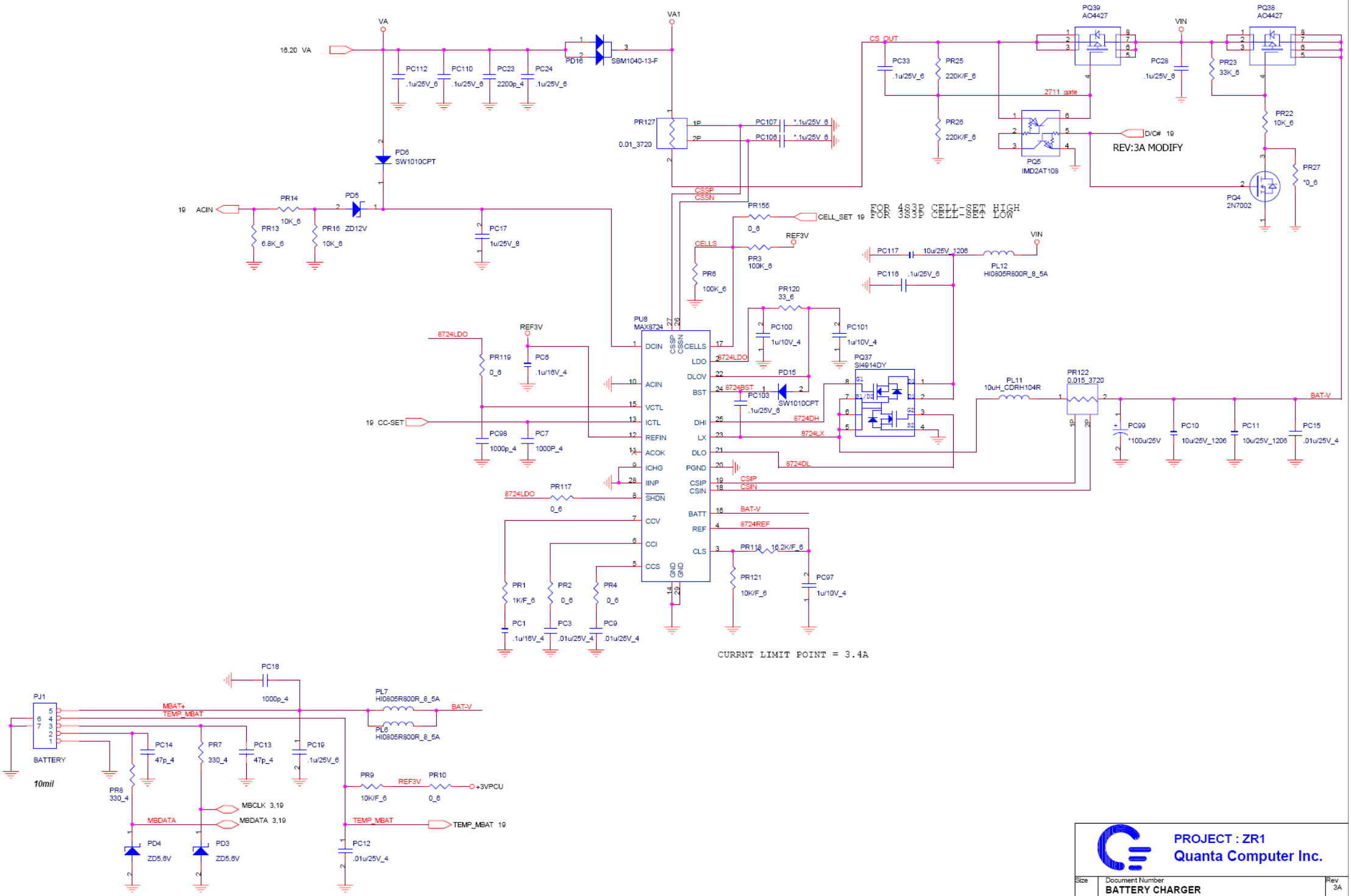

PROJECT : ZR1
Quanta Computer Inc.

Size	Document Number	Rev
	BATTERY CHARGER	3A

Date: Wednesday, August 02, 2006 Sheet 25 of 30

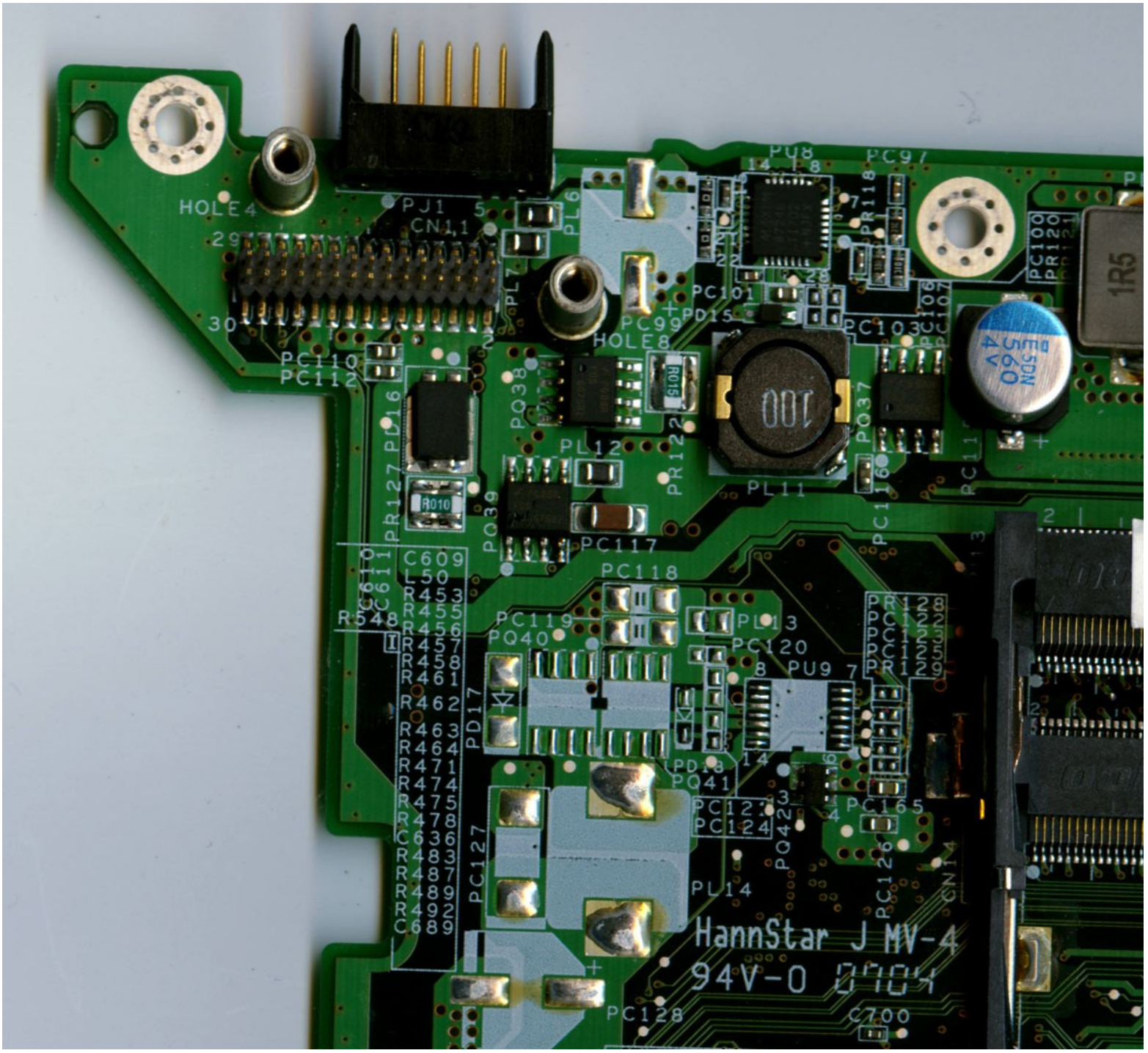
HOLE4
PJ1
CN11
PU8
PC97
PL6
PL7
PC101
PD15
PC99
HOLE8
PC103
PC100
PR120
1R5
PC110
PC112
PQ38
PL12
PR122
PL11
PQ37
PR127
PD16
PQ39
PC117
PC118
C609
L50
R453
R455
R456
R457
R458
R461
R462
R463
R464
R471
R474
R475
R478
C636
R483
R487
R489
R492
C689
R548
PC119
PQ40
PL13
PC120
PU9
PR128
PC122
PC125
PD17
PD18
PQ41
PC121
PC124
PC165
PQ42
PC126
CN14
PC127
PL14
HannStar J MV-4
94V-0
PC128
C700