Generated by Foxit PDF Creator © Foxit Software
http://www.foxitsoftware.com For evaluation only.

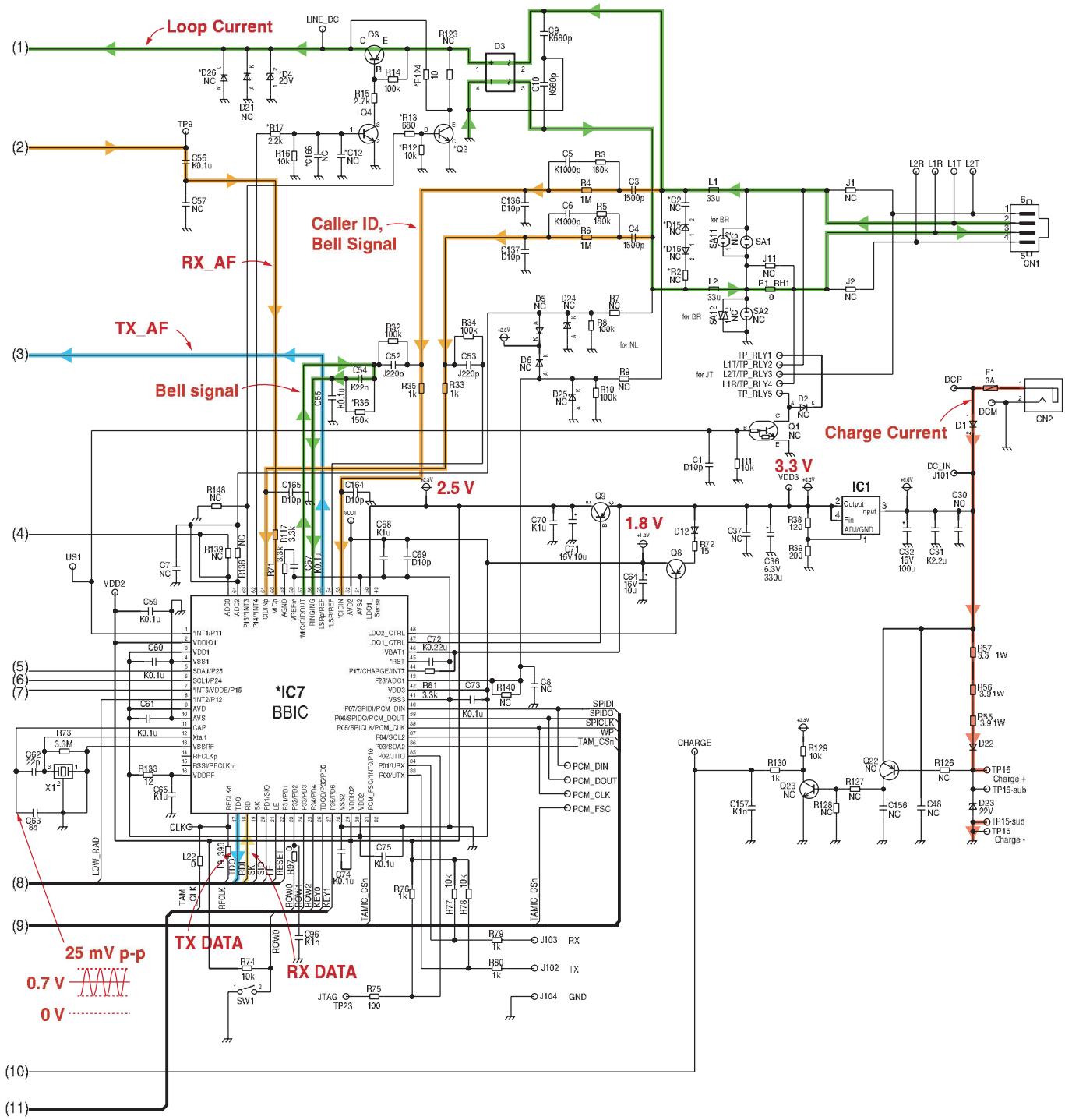

NC: No Components

KX-TG7205/7206RU SCHEMATIC DIAGRAM (Base Unit)