5 Schematic and Block Diagram

5.1. Schematic Diagram Note

Important Safety Notice

Components identified by ⚠ mark have special characteristics important for safety.
When replacing any of these components, use only manufacture's specified parts.

Notes:

1. **Resistor**
   Unit of resistance is OHM [Ω] (K=1,000, M=1,000,000).
2. **Capacitor**
   Unit of capacitance is μF, unless otherwise noted.
3. Coil
   Unit of inductance is H, unless otherwise noted.
4. Test Point
   ⚲ : Test Point position
5. Earth Symbol
   ⏚ : Chassis Earth (Cold) ▽ : Line Earth (Hot)
6. Voltage Measurement
   Voltage is measured by a DC voltmeter.
   Conditions of the measurement are the following:
   Power Source AC220-240V, 50/60Hz
   Receiving Signal ..... Colour Bar signal (RF)
   All customer's controls ..... Maximum positions
7. When arrow mark (↗) is found, connection is easily found from the direction of arrow.
8. Indicates the major signal flow. : Video ➡ Audio ⇨
9. This schematic diagram is the latest at the time of printing and subject to change without notice.

Remarks:

1. The Power Circuit contains a circuit area which uses a separate power supply to isolate the earth connection.
   The circuit is defined by HOT and COLD indications in the schematic diagram. Take the follwing precautions.
   All circuits, except the Power Circuit, are cold.
   Precautions
   a. Do not touch the hot part or the hot and cold parts at the same time or you may be shocked.
   b. Do not short- circuit the hot and cold circuits or a fuse may blow and parts may break.
   c. Do not connect an instrument, such as an oscilloscope, to the hot and cold circuits simultaneously or a fuse may blow.
   Connect the earth of instruments to the earth connection of the circuit being measured.
   d. Make sure to disconnect the power plug before removing the chassis.

5.2. Main Block Diagram

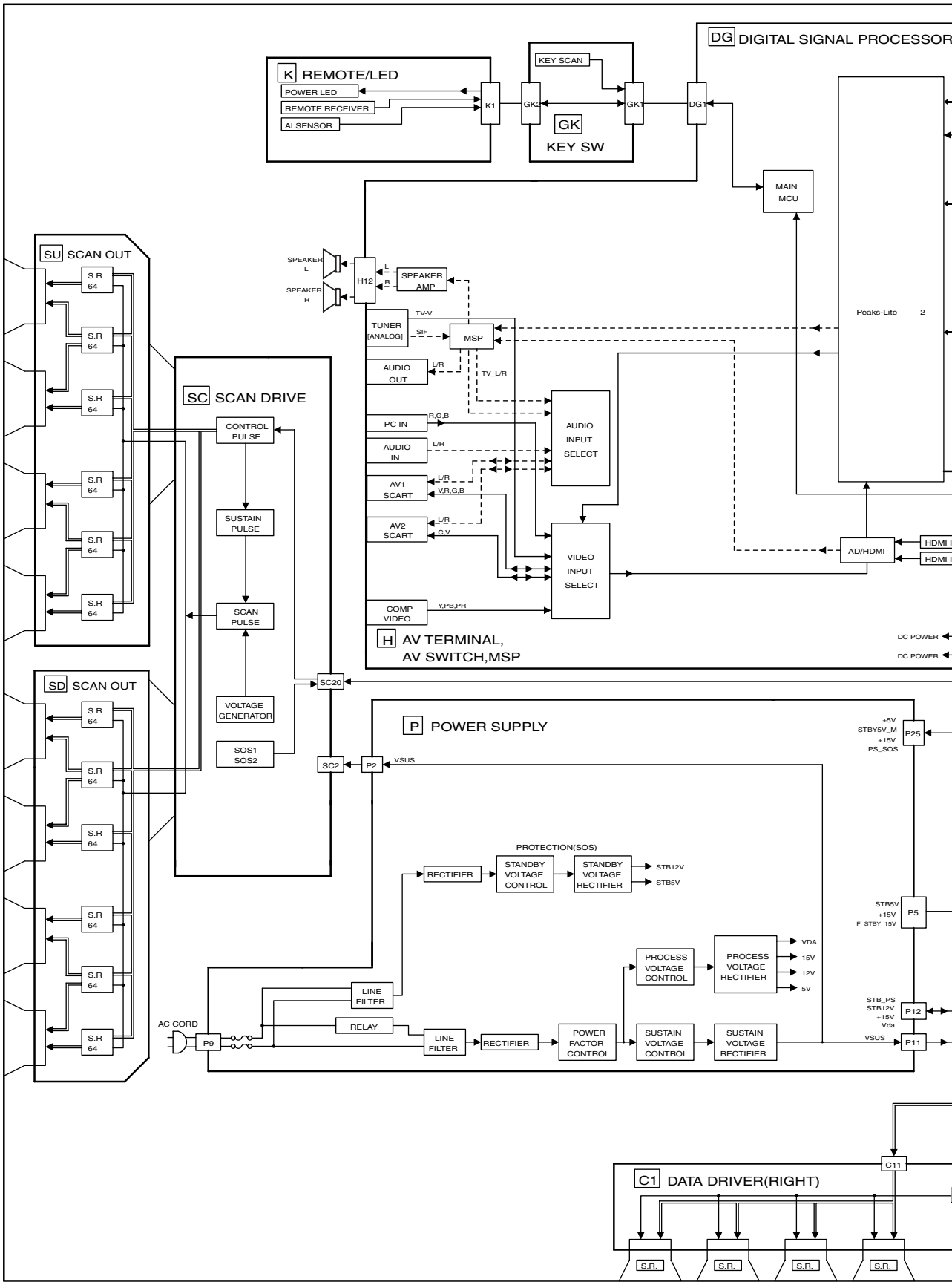

TH-R42PV70K
Main Block Diagram

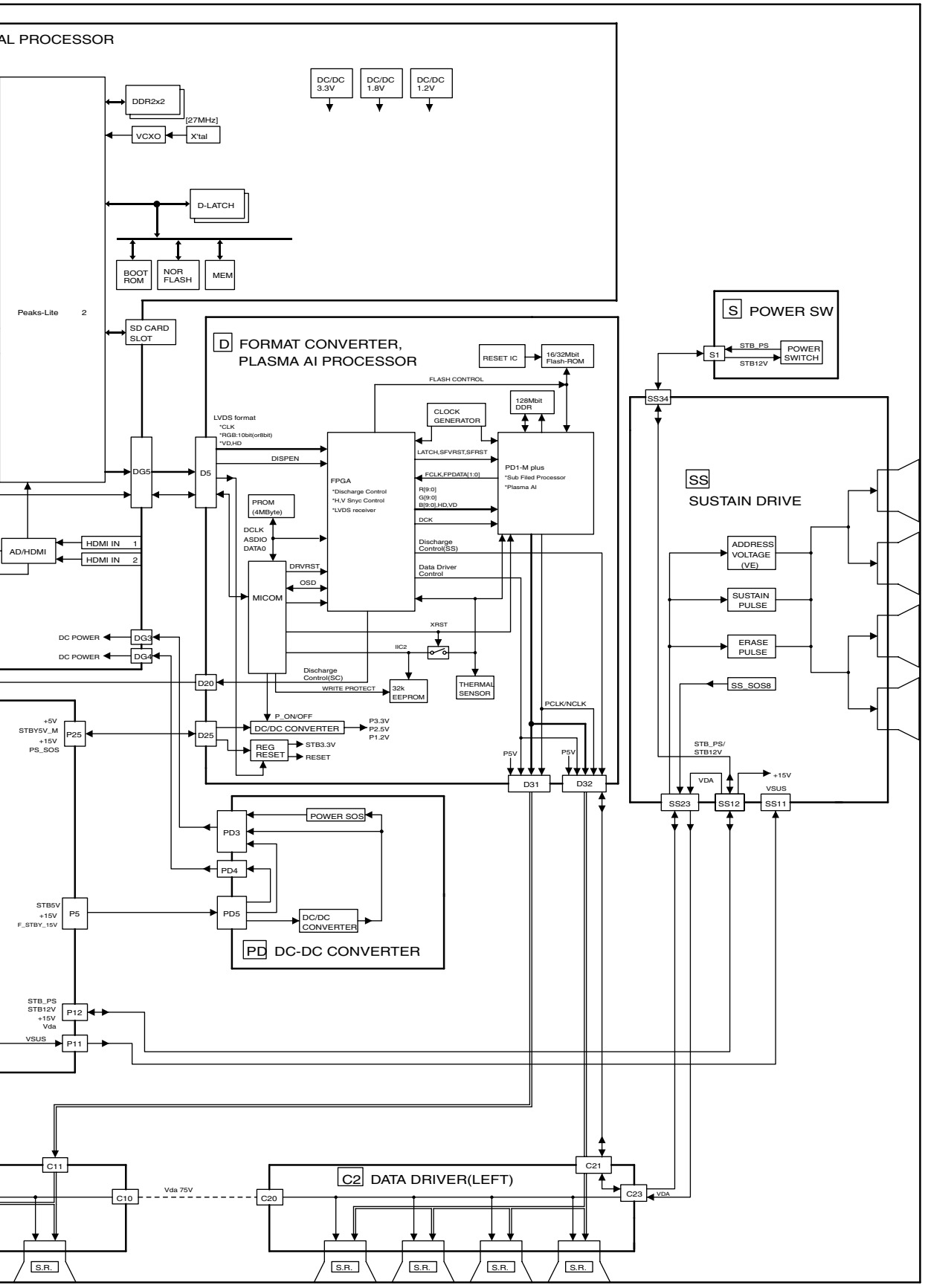

TH-R42PV70K
Main Block Diagram

5.3. P-Board Block Diagram

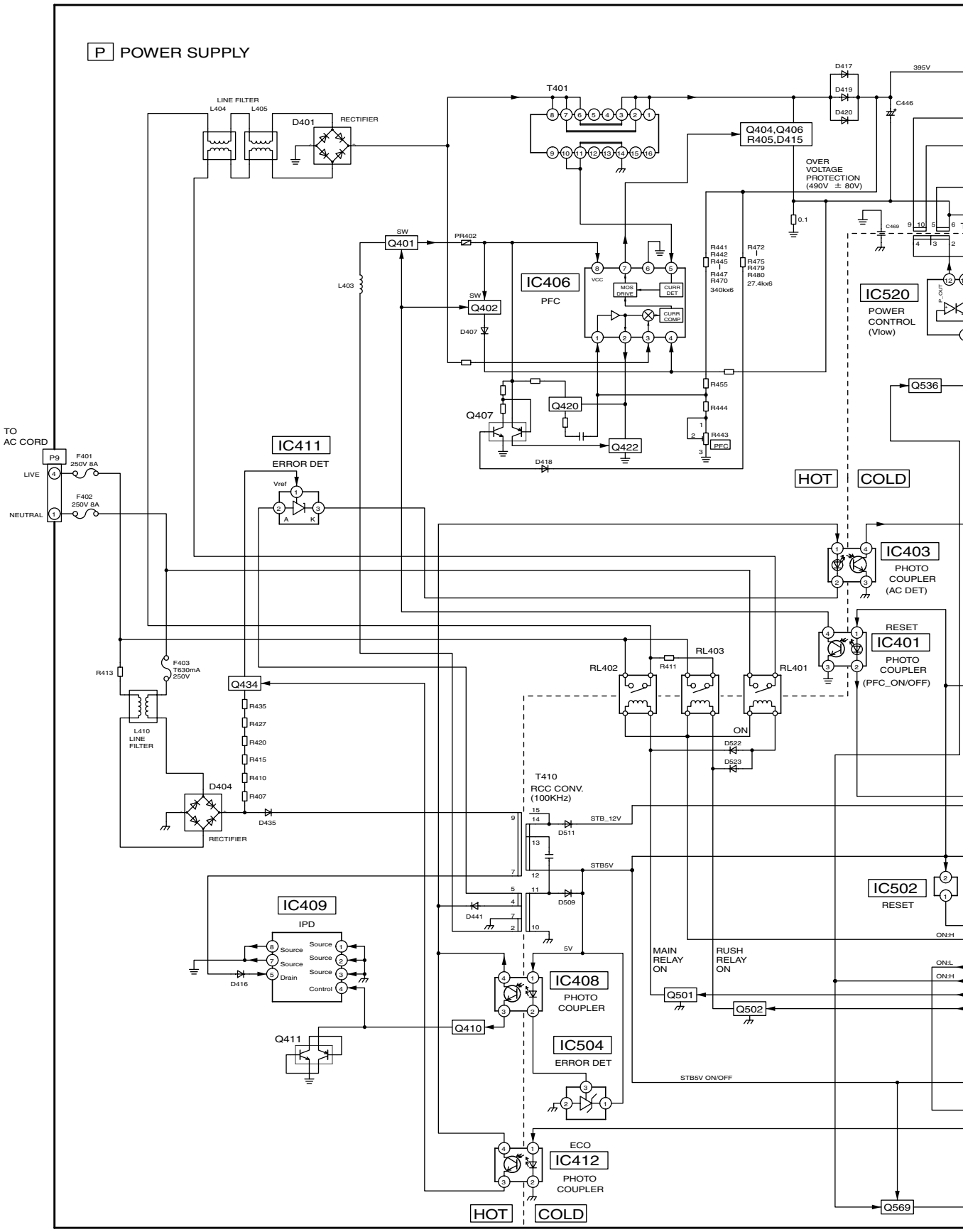

TH-R42PV70K
P-Board Block Diagram

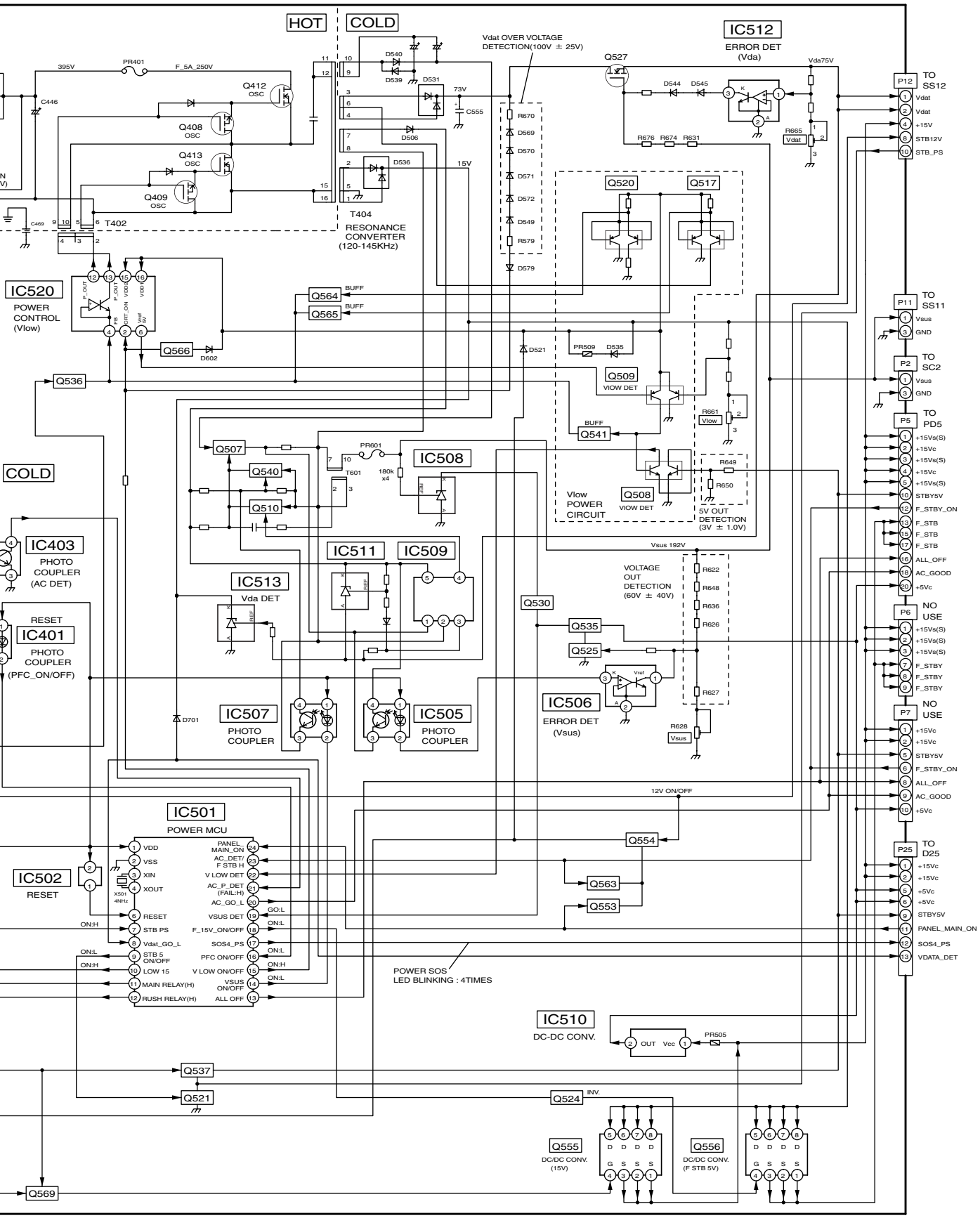

TH-R42PV70K
P-Board Block Diagram

5.4. P-Board (1 of 6) Schematic Diagram

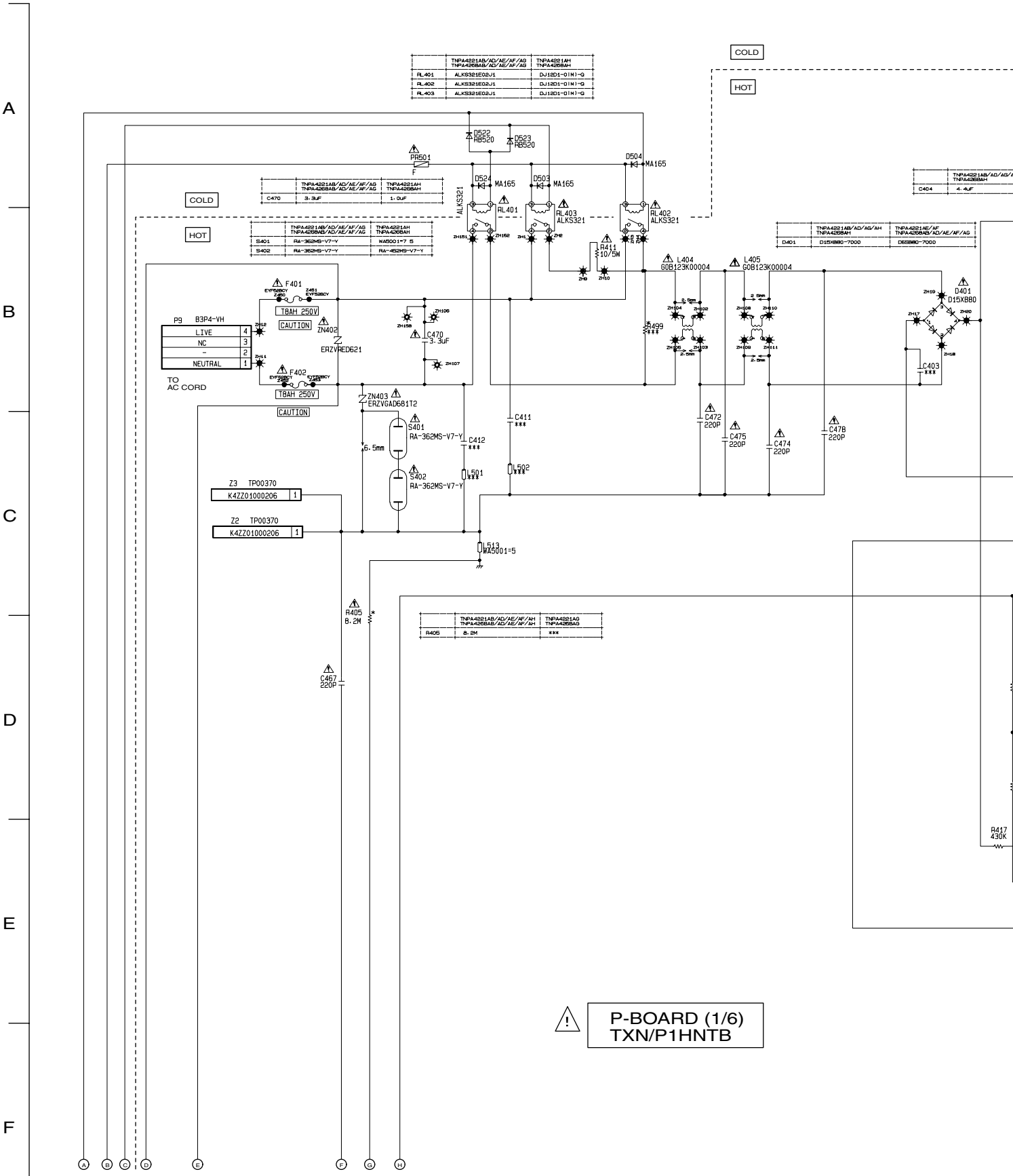

TH-R42PV70K
P-Board (1 of 6) Schematic Diagram

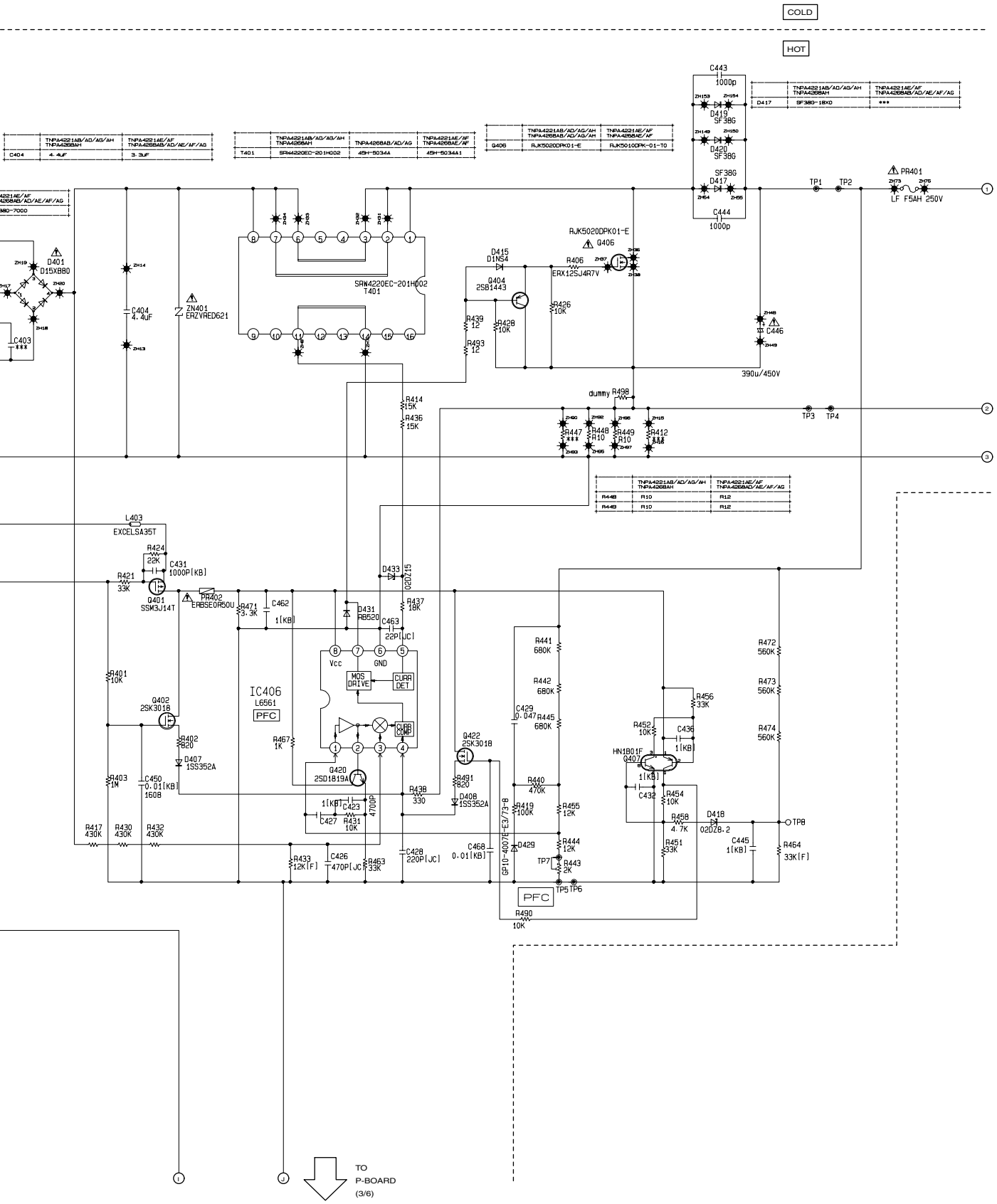

TH-R42PV70K
P-Board (1 of 6) Schematic Diagram

5 6 7 8 9

5.5. P-Board (2 of 6) Schematic Diagram

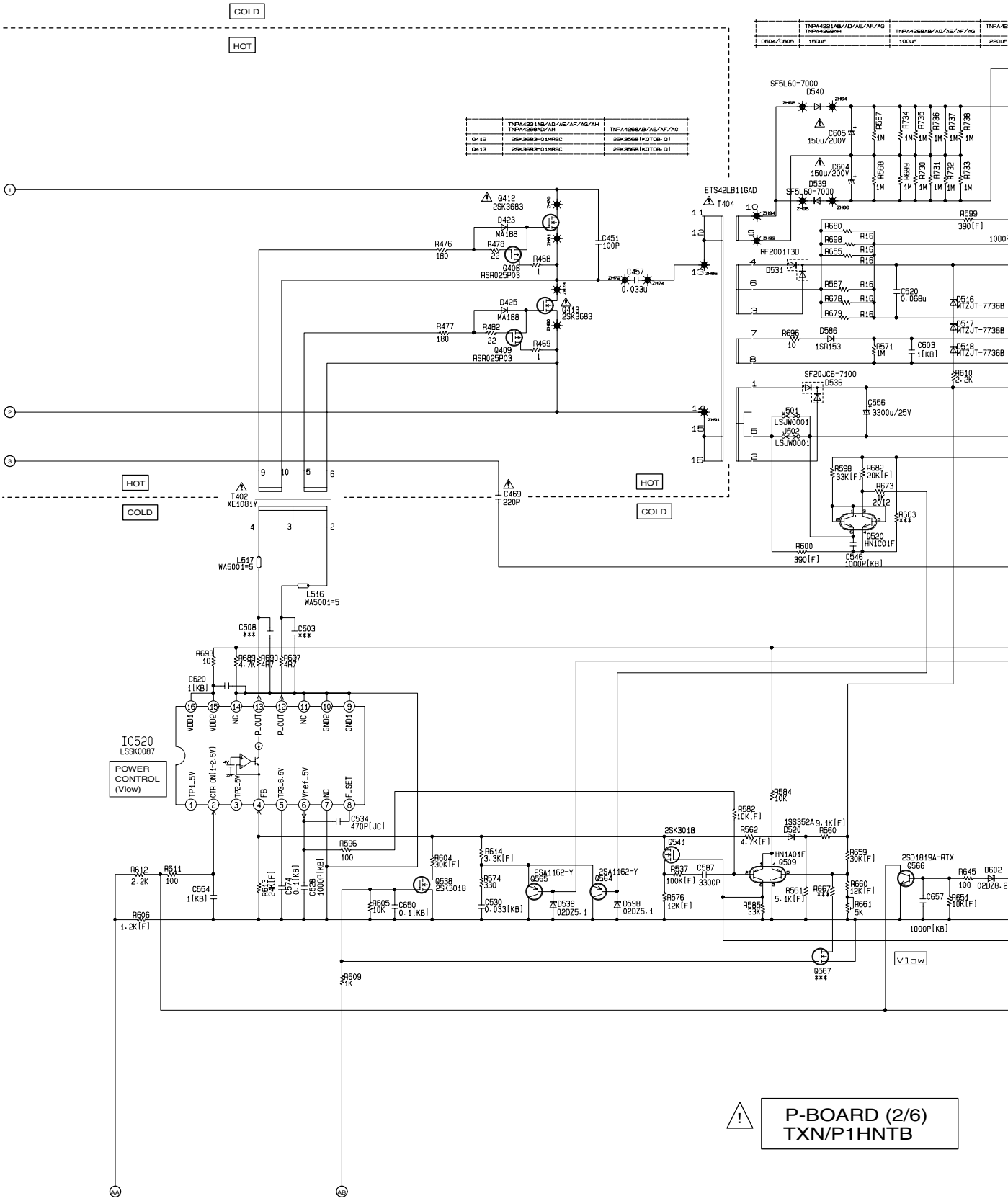

TH-R42PV70K
P-Board (2 of 6) Schematic Diagram

10 11 12 13 14

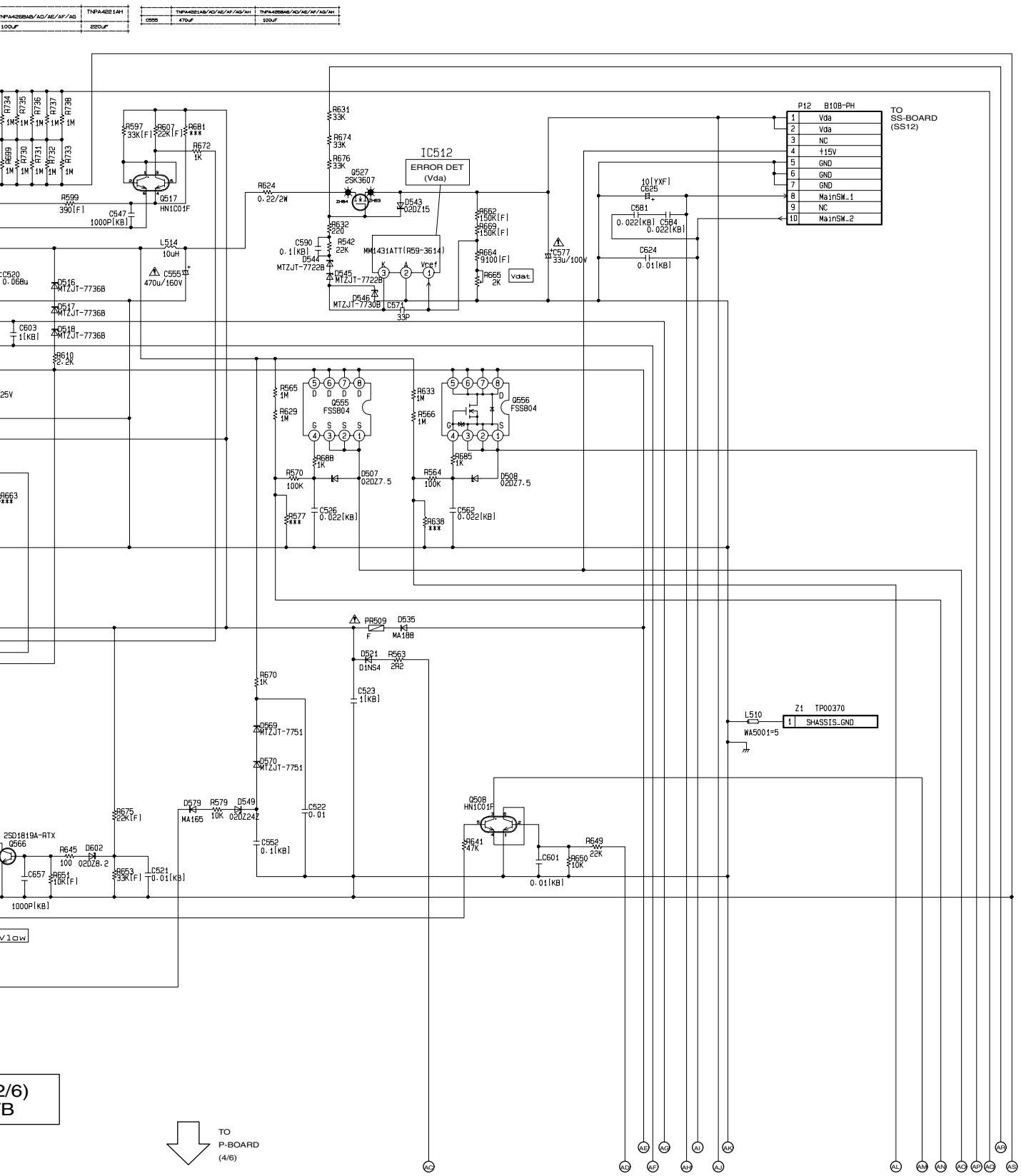

TH-R42PV70K
P-Board (2 of 6) Schematic Diagram

14 15 16 17 18

5.6. P-Board (3 of 6) Schematic Diagram

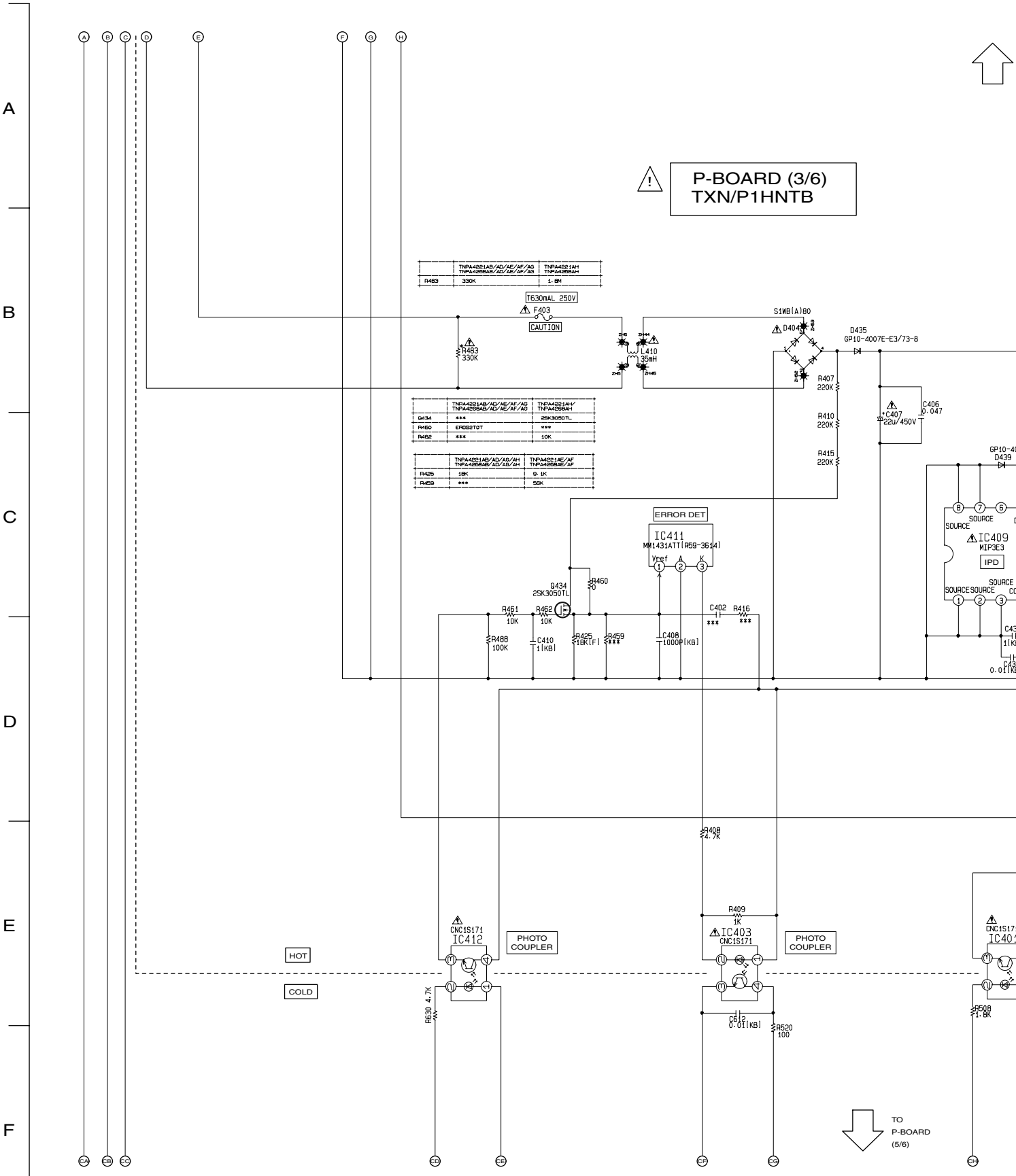

TH-R42PV70K
P-Board (3 of 6) Schematic Diagram

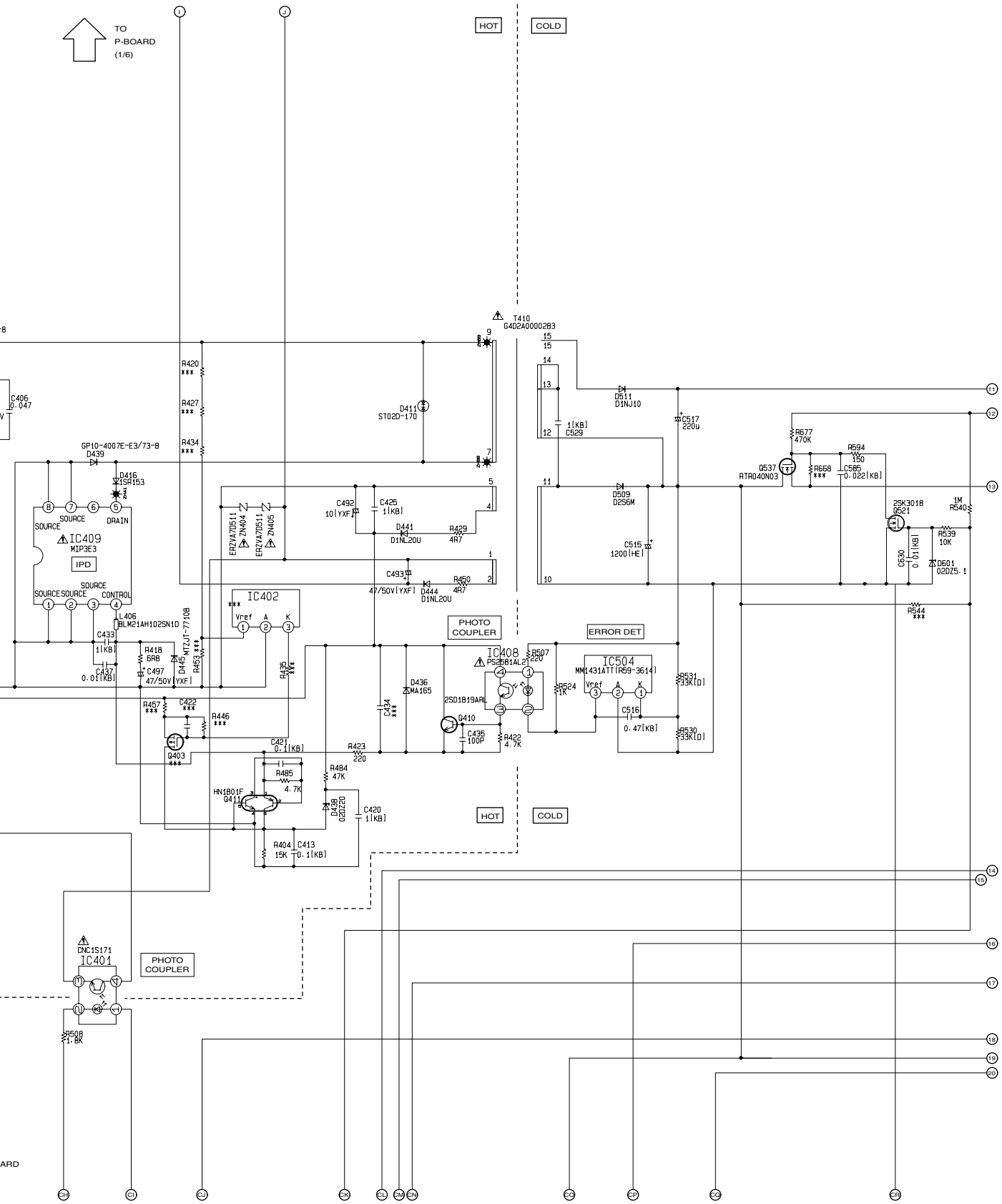

TH-R42PV70K
P-Board (3 of 6) Schematic Diagram

5 6 7 8 9

5.7. P-Board (4 of 6) Schematic Diagram

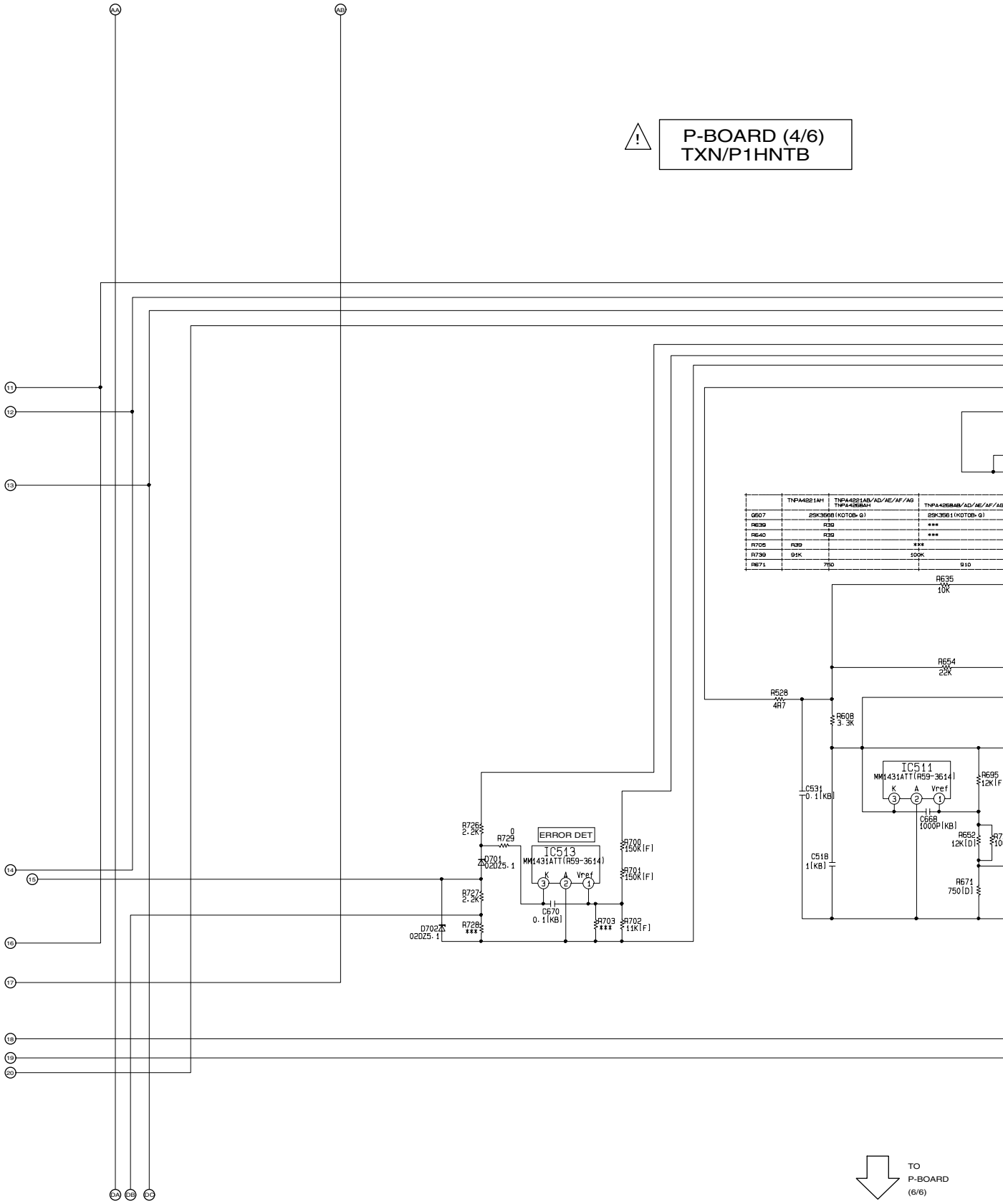

TH-R42PV70K
P-Board (4 of 6) Schematic Diagram

10 11 12 13 14

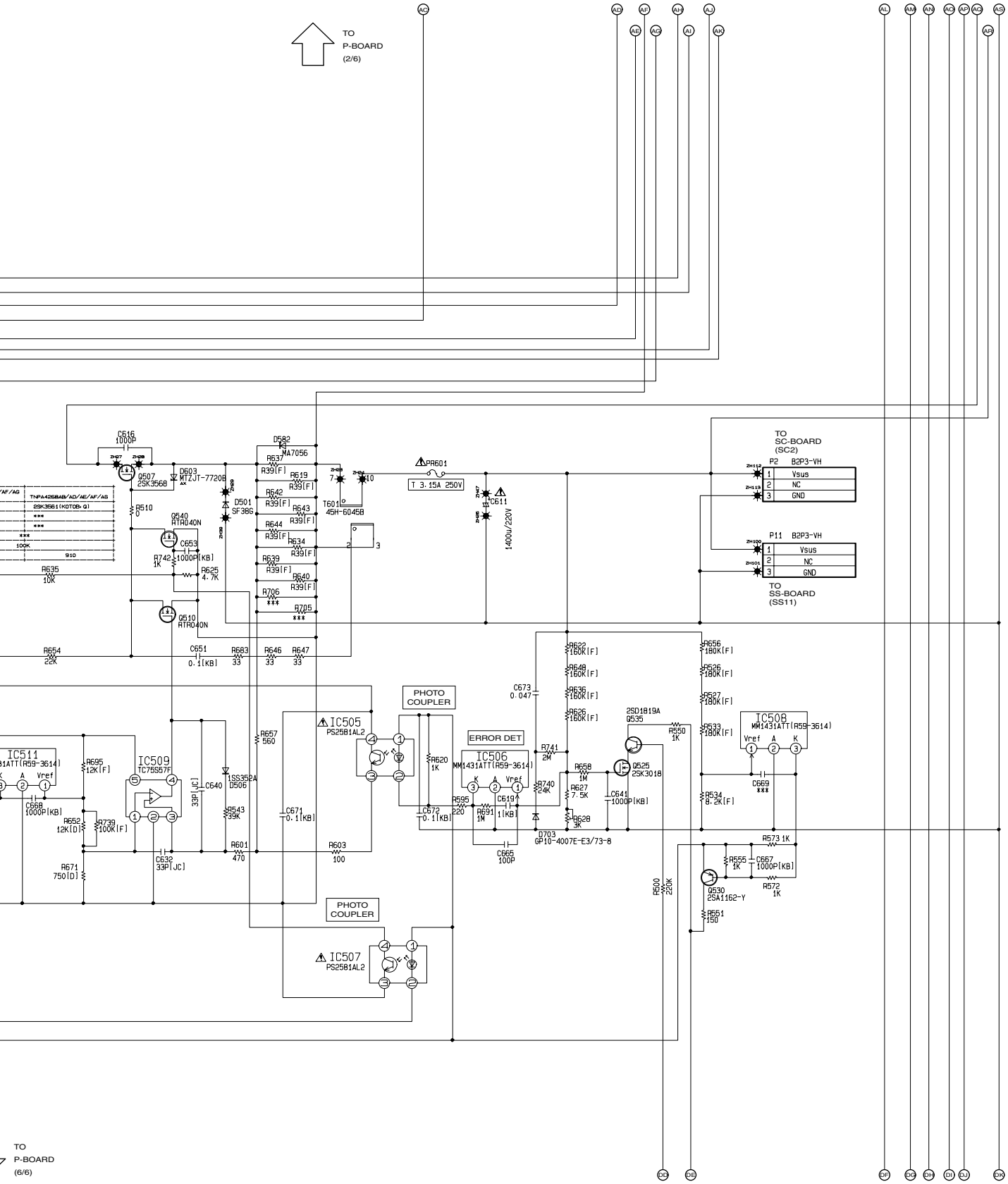

TH-R42PV70K
P-Board (4 of 6) Schematic Diagram

14 15 16 17 18

5.8. P-Board (5 of 6) Schematic Diagram

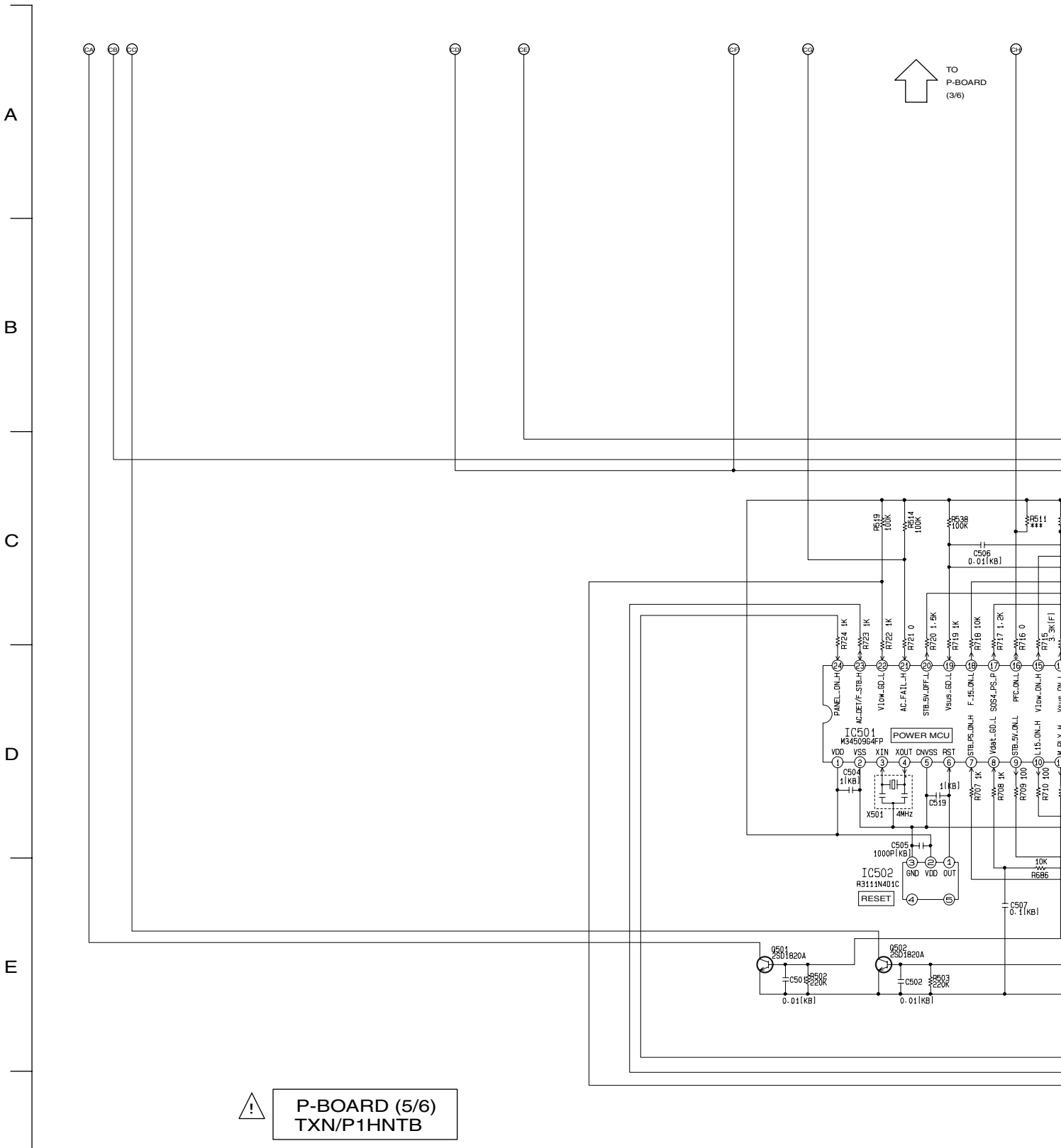

TH-R42PV70K
P-Board (5 of 6) Schematic Diagram

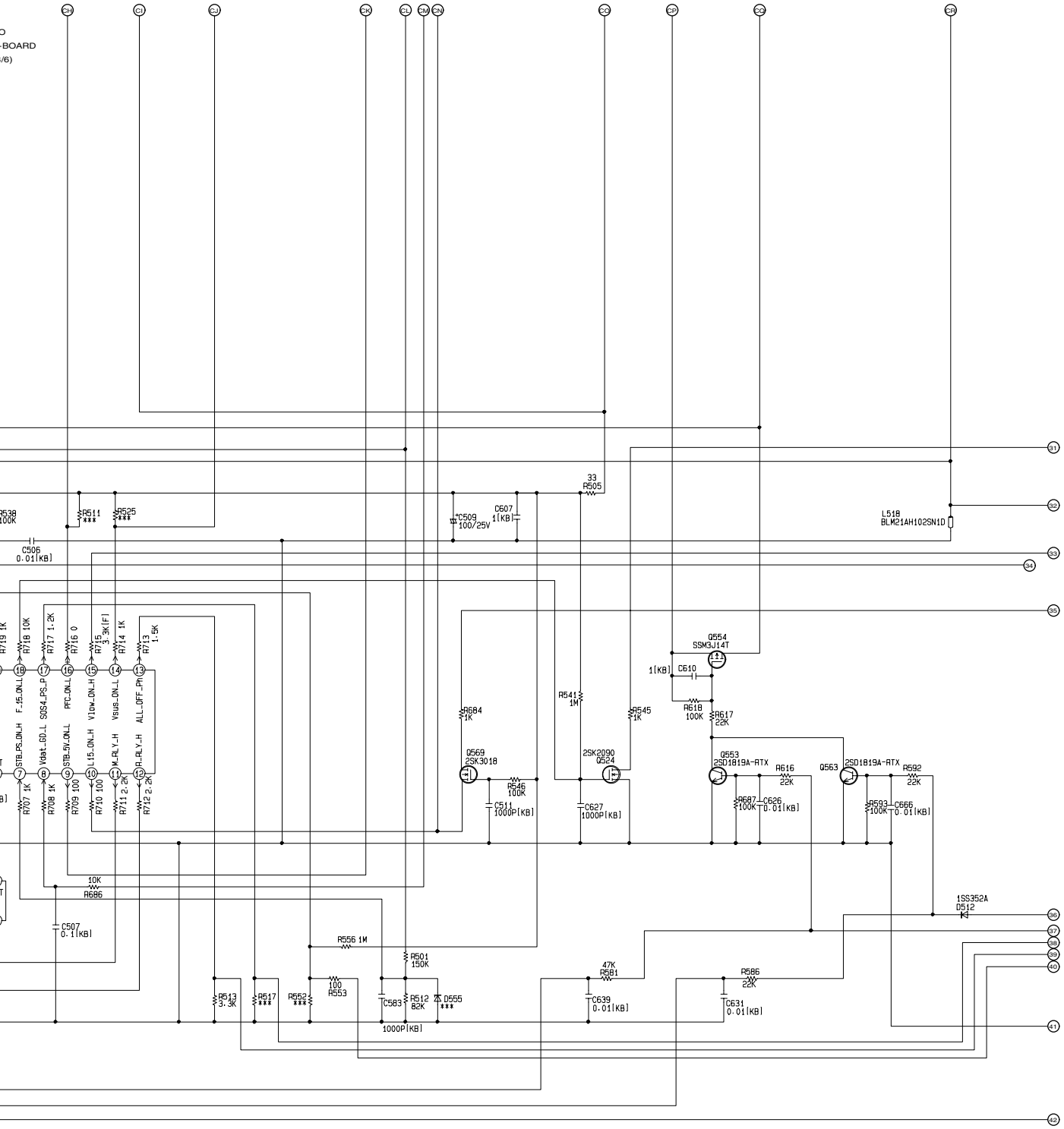

TH-R42PV70K
P-Board (5 of 6) Schematic Diagram

5 6 7 8 9

5.9. P-Board (6 of 6) Schematic Diagram

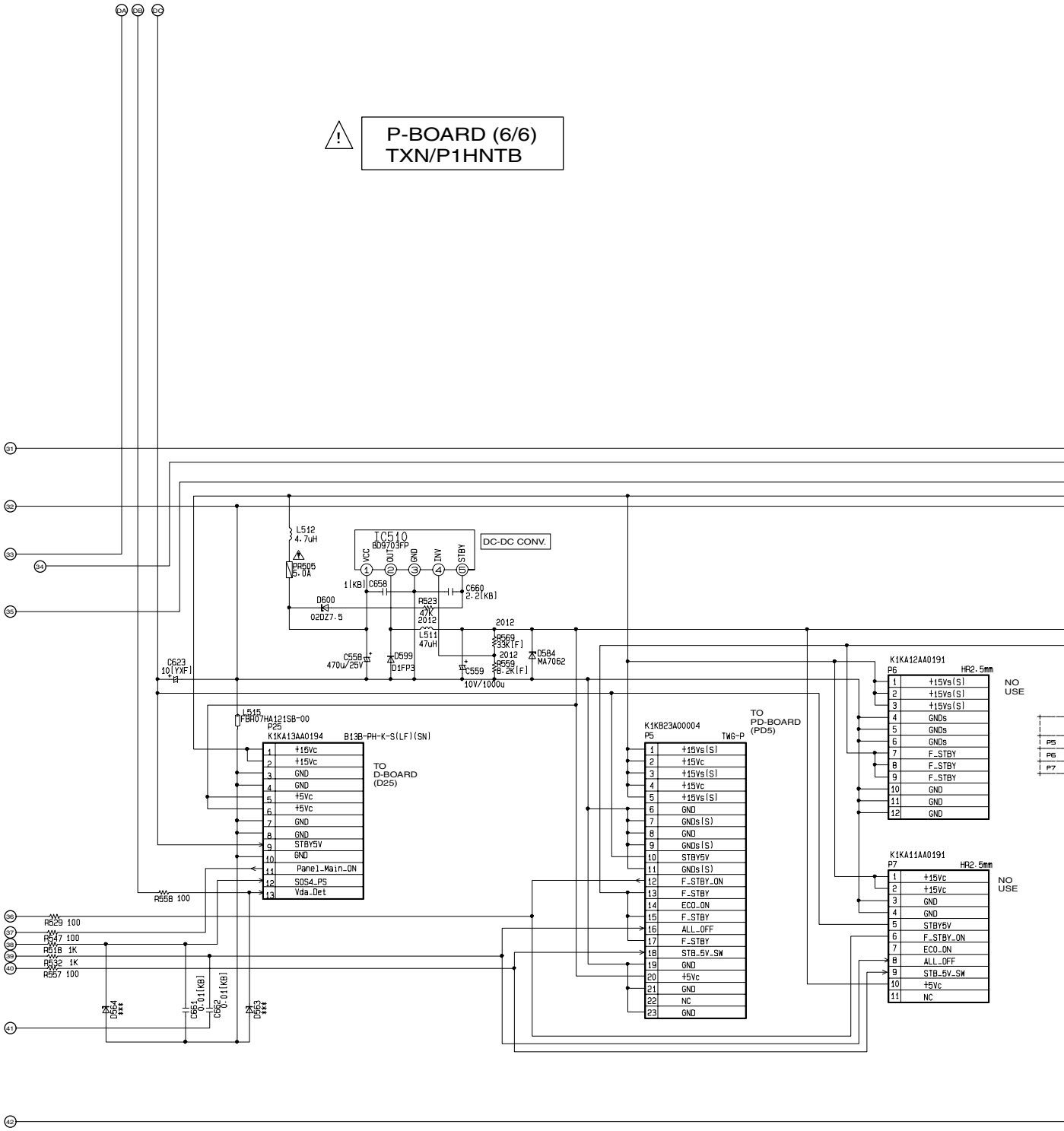

TH-R42PV70K
P-Board (6 of 6) Schematic Diagram

10 11 12 13 14

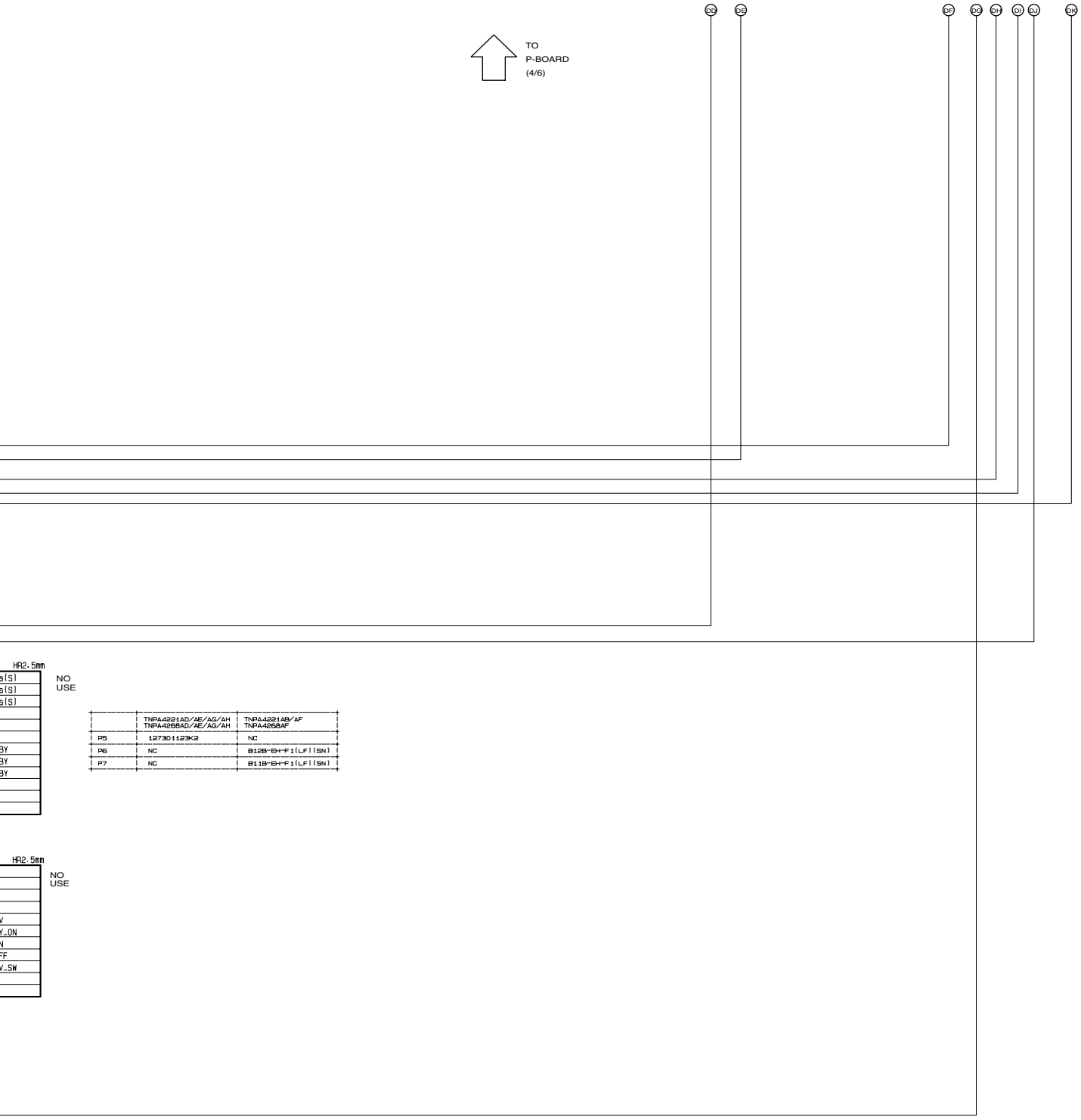

	TNPA4221AD/AE/AG/AH TNPA4268AD/AE/AG/AH	TNPA4221AB/AF TNPA4268AF
P5	1273011123K2	NC
P6	NC	B12B-EH-F1(LF)(SN)
P7	NC	B11B-EH-F1(LF)(SN)

TH-R42PV70K
P-Board (6 of 6) Schematic Diagram

14 15 16 17 18

5.10. PD-Board Block Diagram

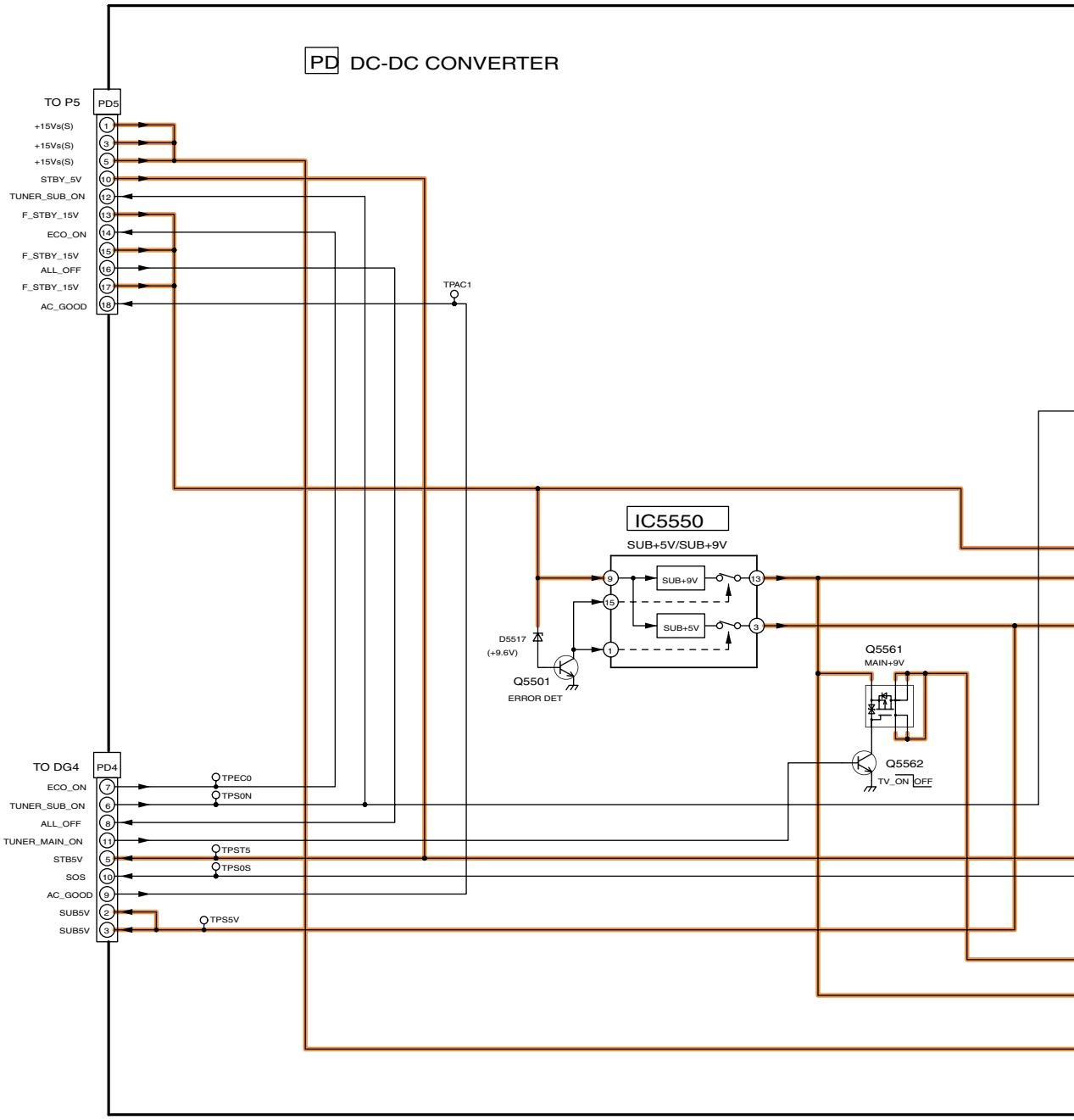

TH-R42PV70K
PD-Board Block Diagram

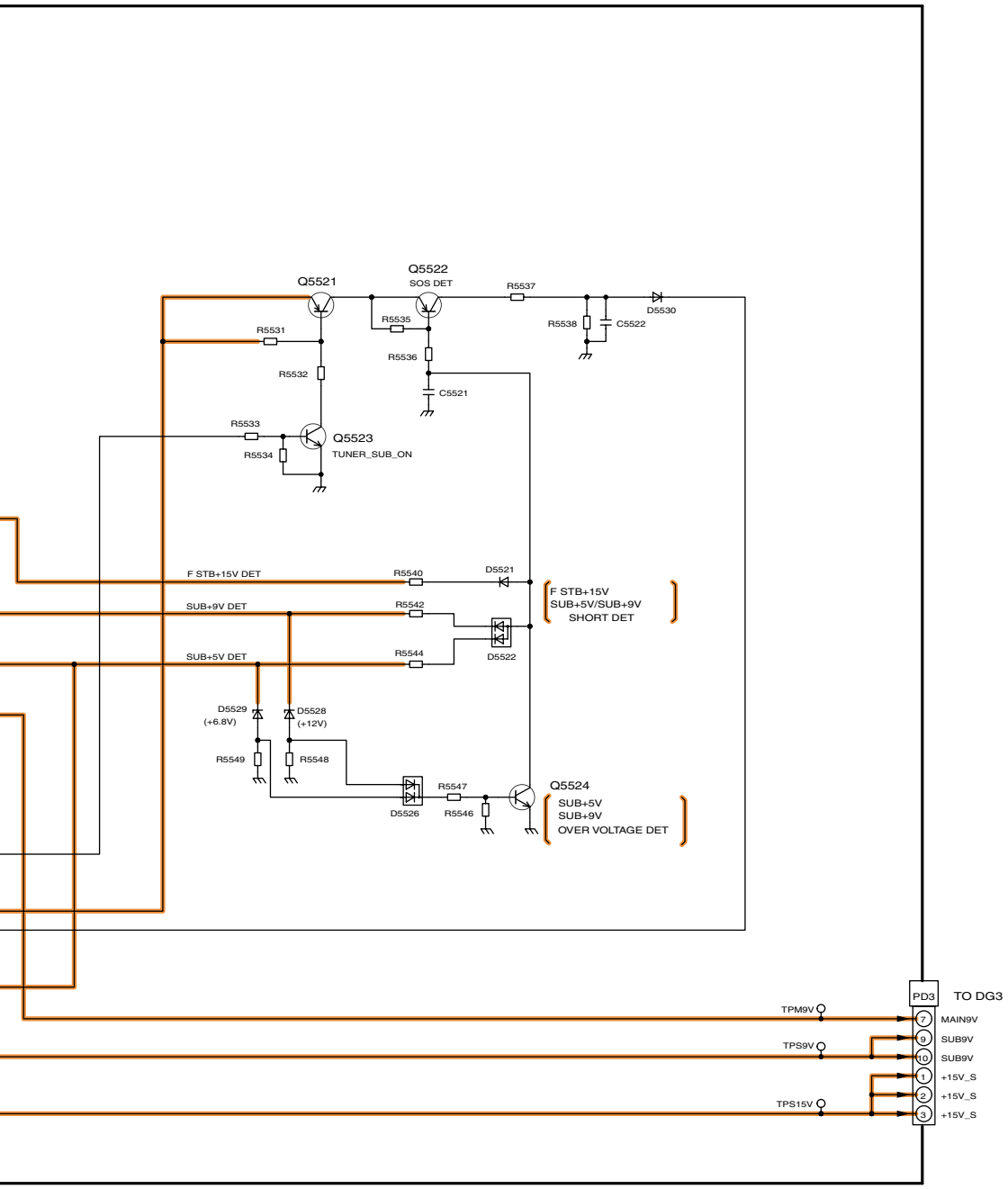

TH-R42PV70K
PD-Board Block Diagram

5.11. PD-Board Schematic Diagram

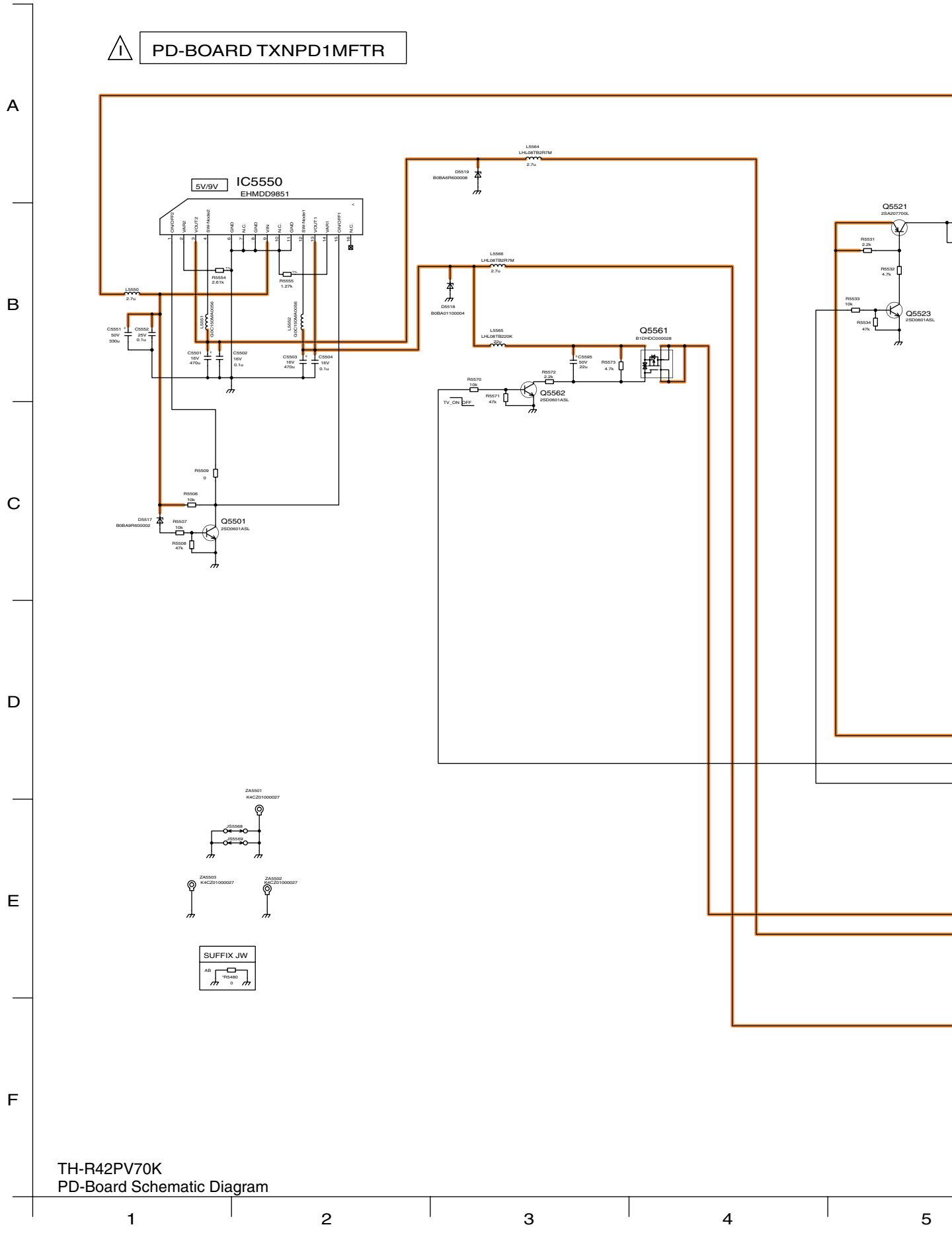

TH-R42PV70K
PD-Board Schematic Diagram

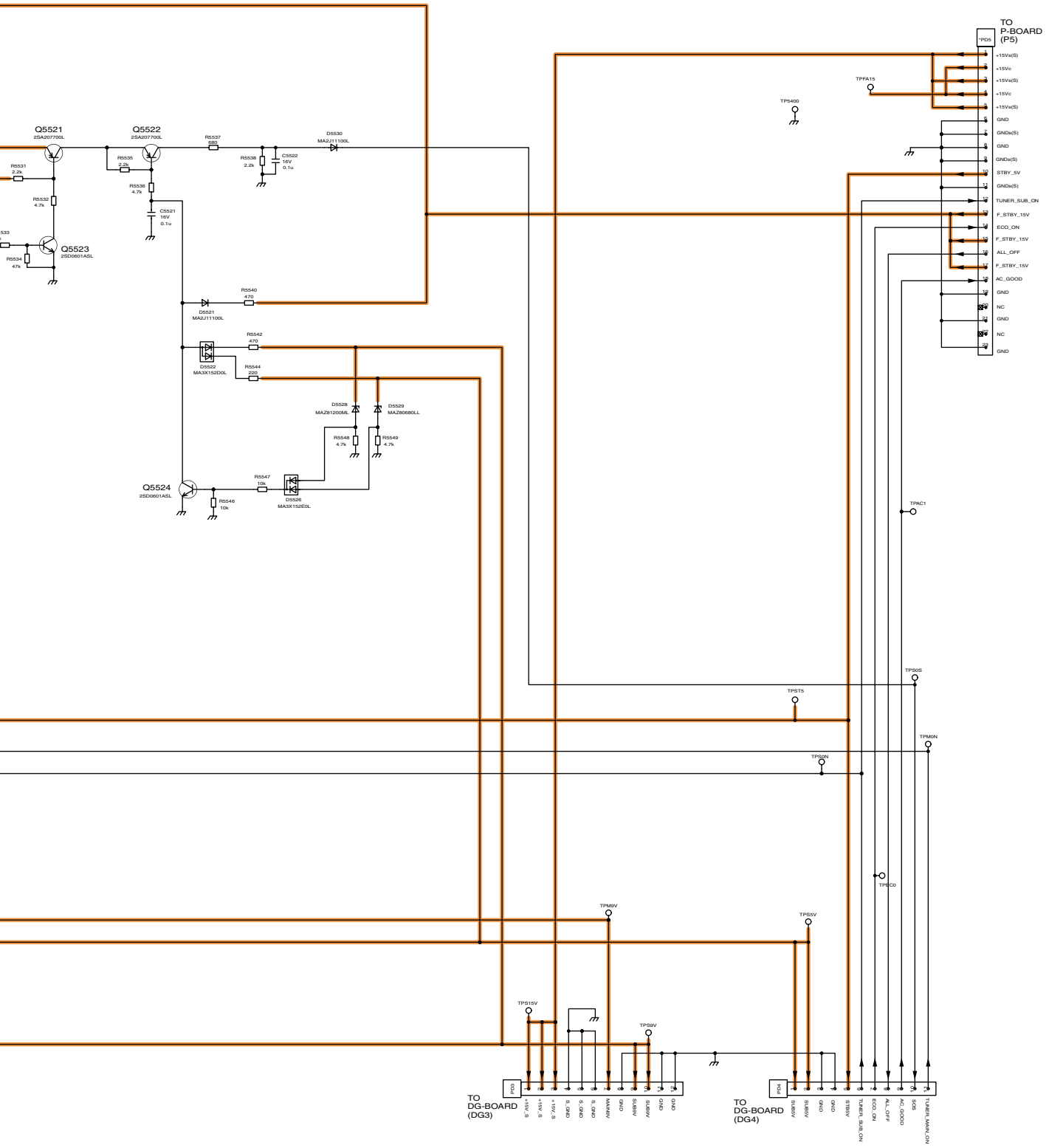

TH-R42PV70K
PD-Board Schematic Diagram

5 6 7 8 9

5.12. DG-Board (1 of 4) Block Diagram

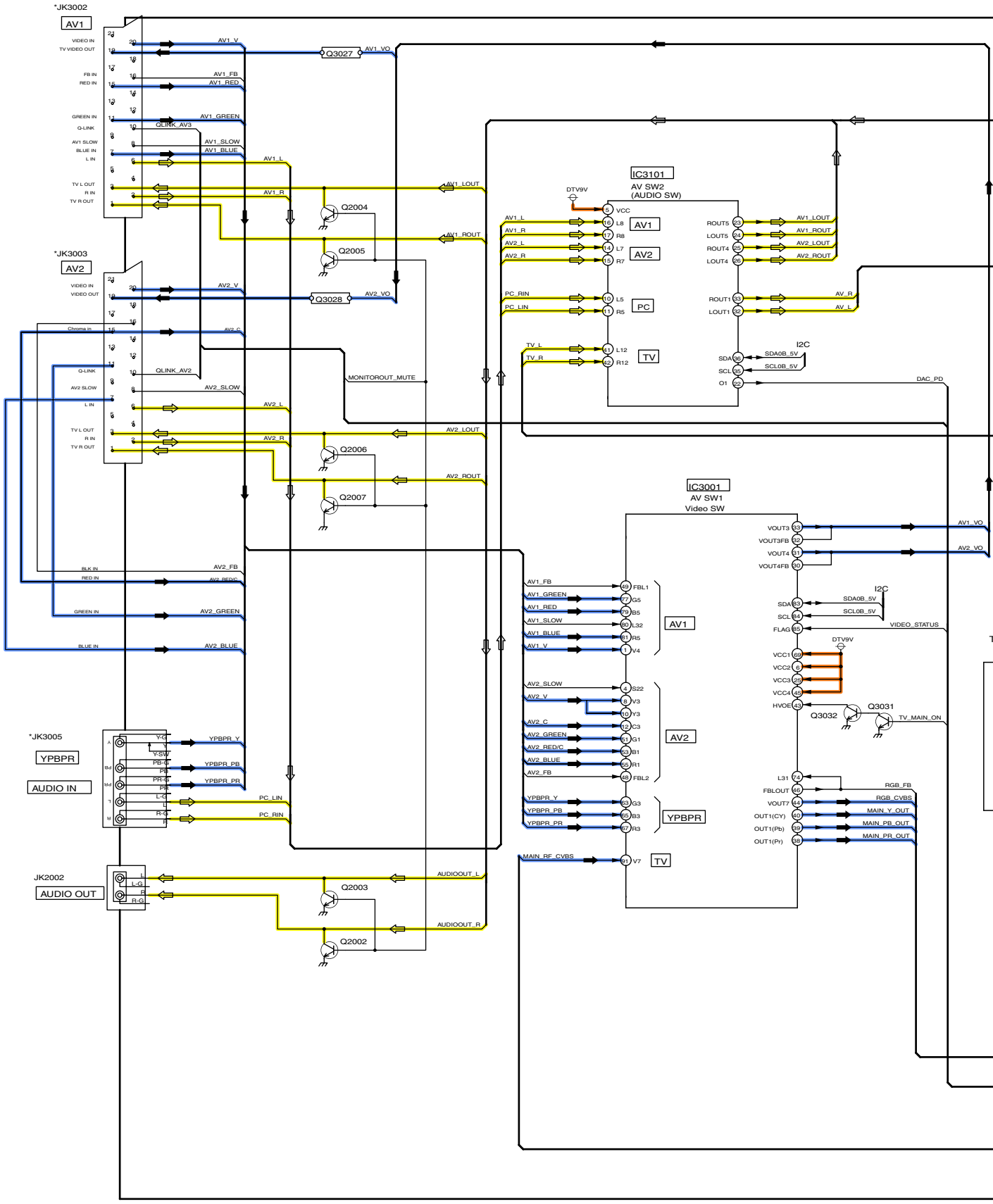

TH-R42PV70K
DG-Board (1 of 4) Block Diagram

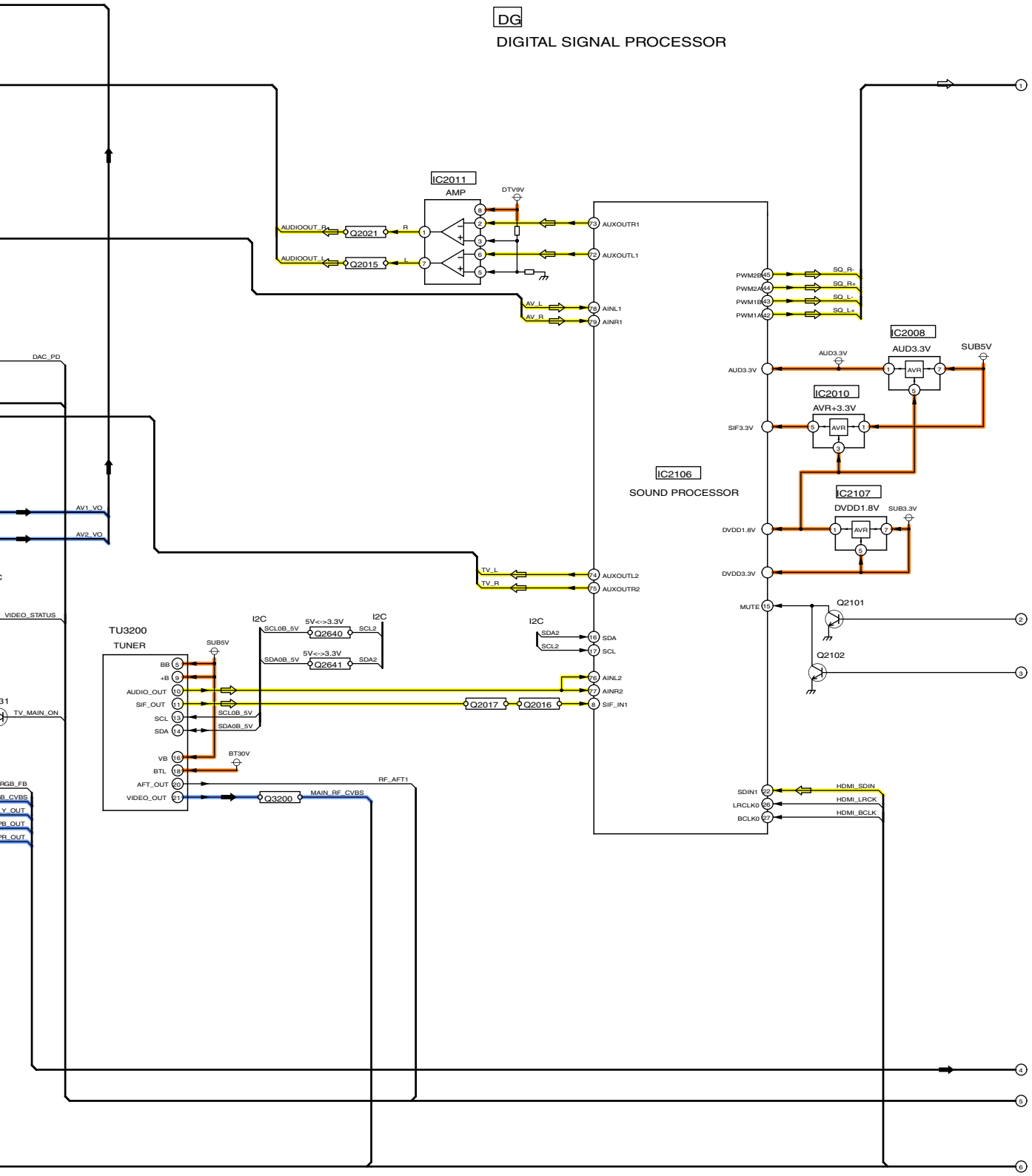

TH-R42PV70K
DG-Board (1 of 4) Block Diagram

5.13. DG-Board (2 of 4) Block Diagram

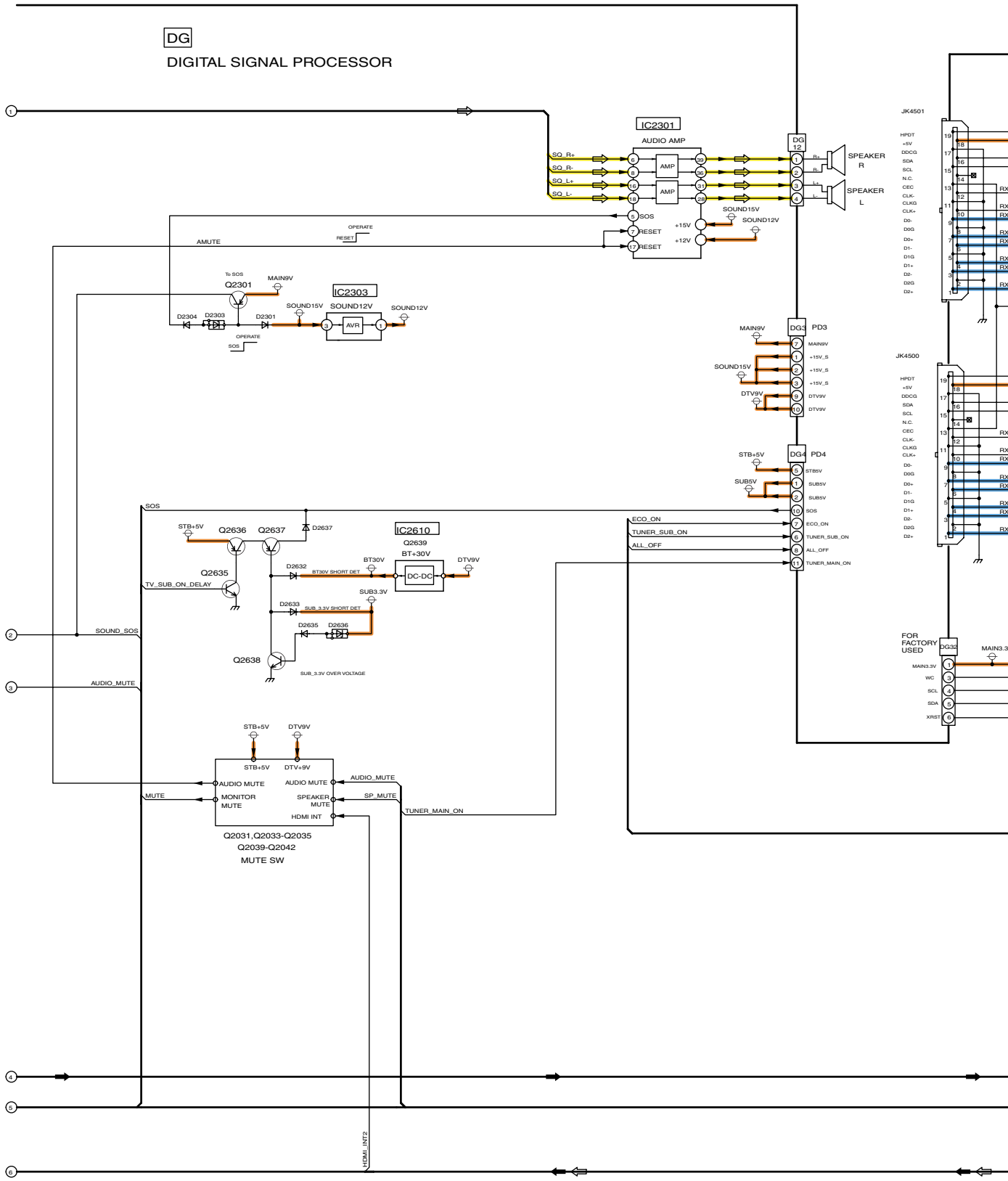

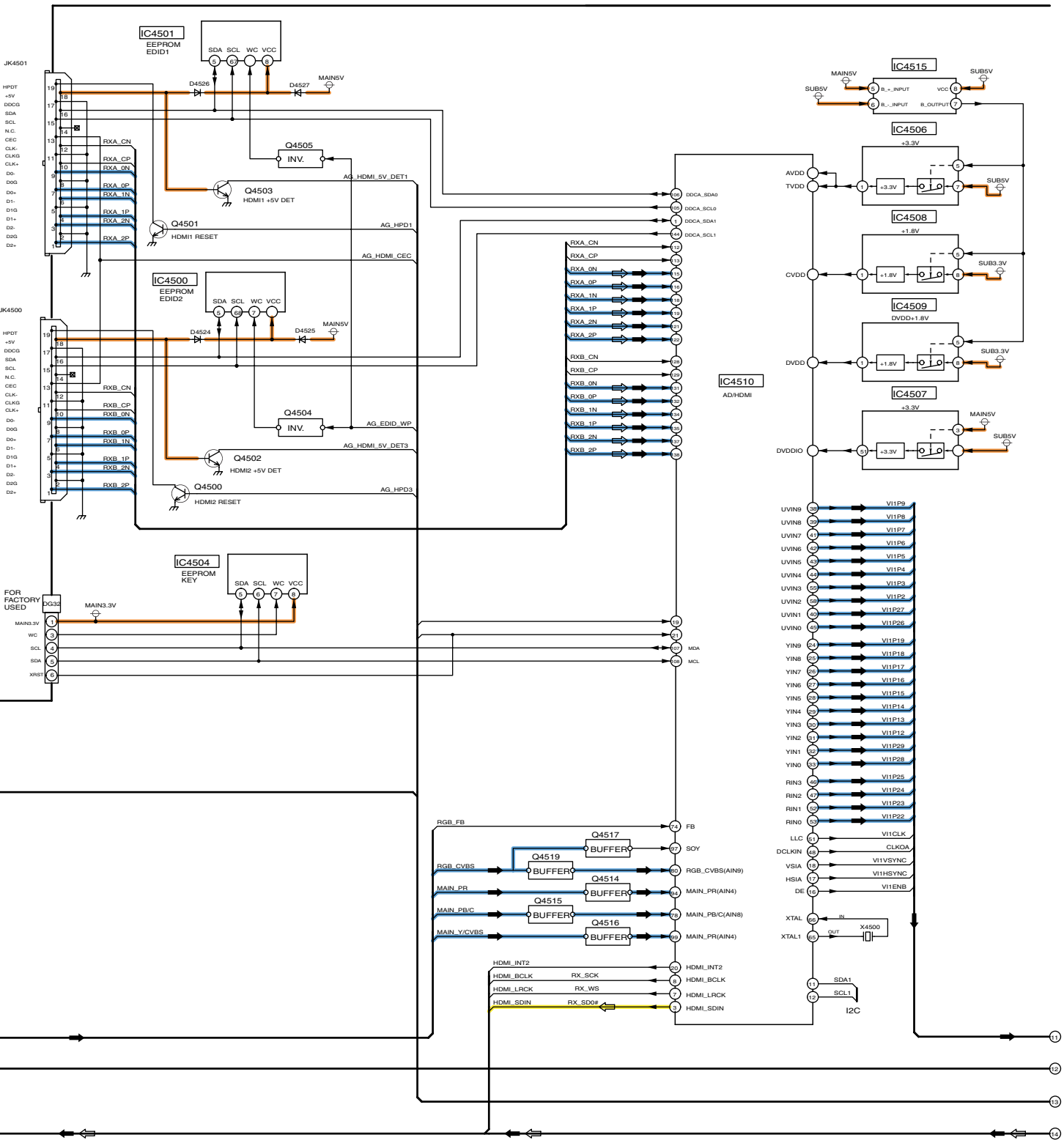

TH-R42PV70K
DG-Board (2 of 4) Block Diagram

5.14. DG-Board (3 of 4) Block Diagram

DG

DIGITAL SIGNAL PROCESSOR

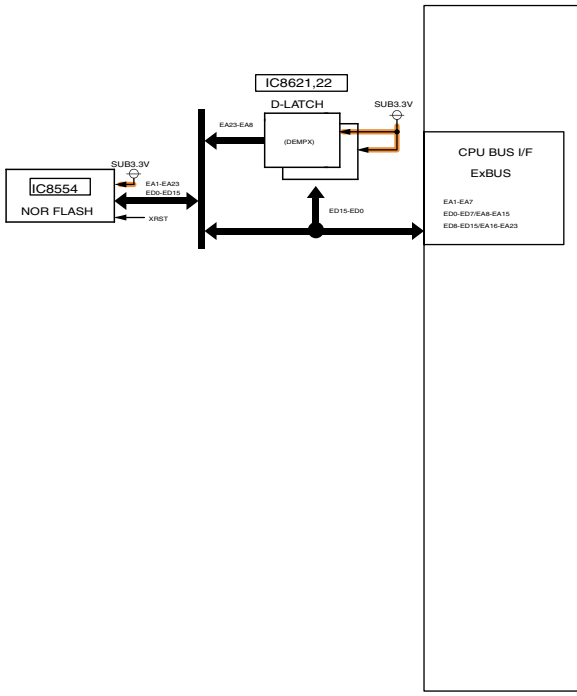

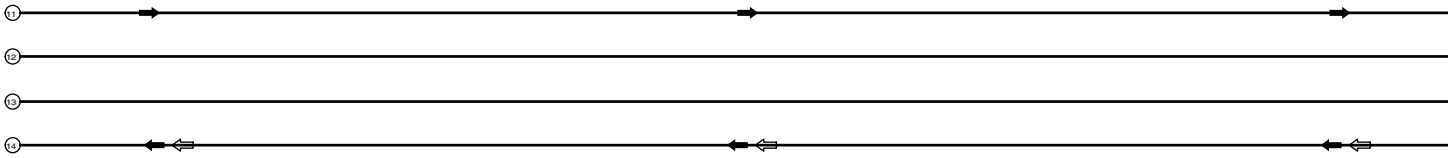

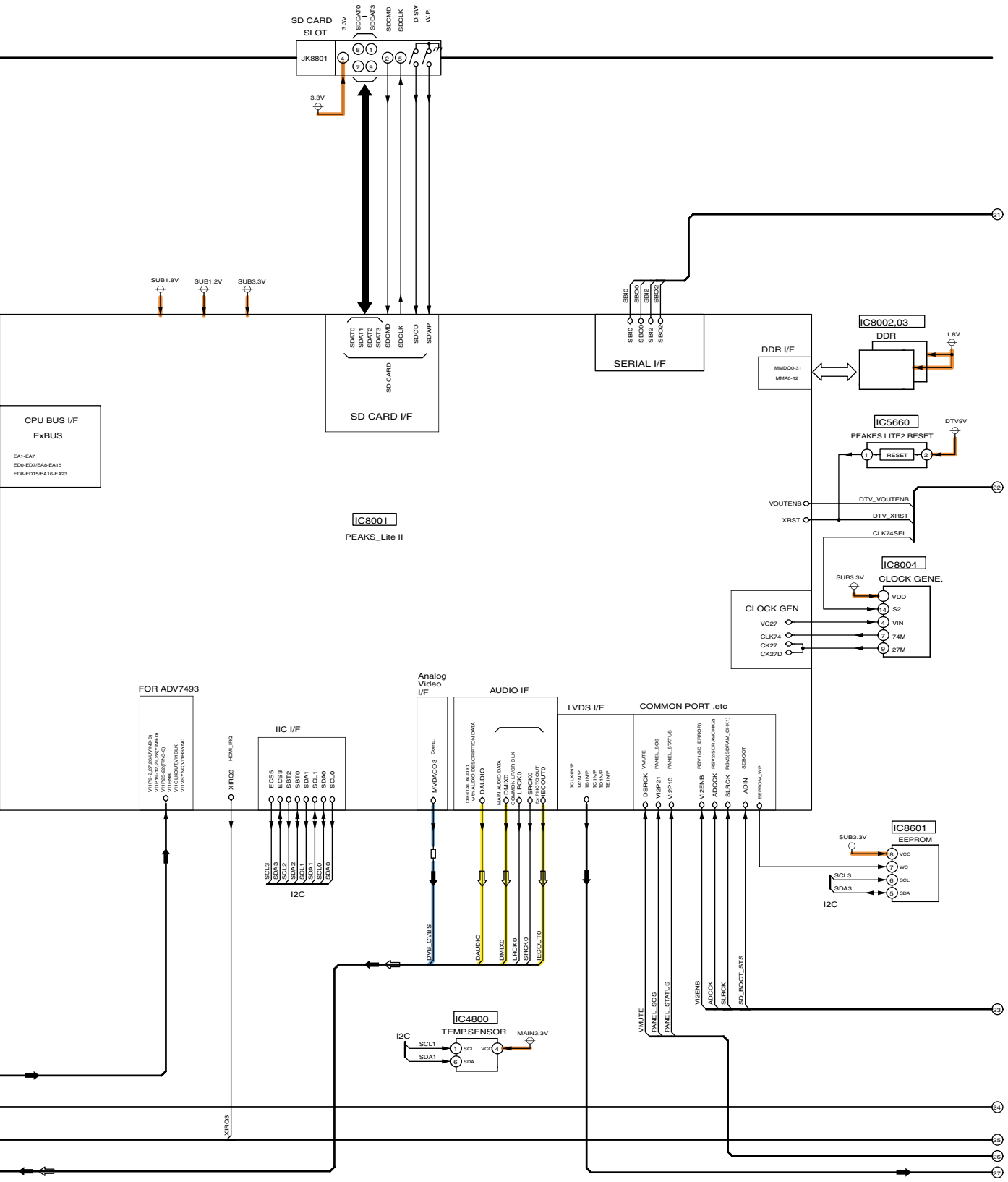

TH-R42PV70K
DG-Board (3 of 4) Block Diagram

5.15. DG-Board (4 of 4) Block Diagram

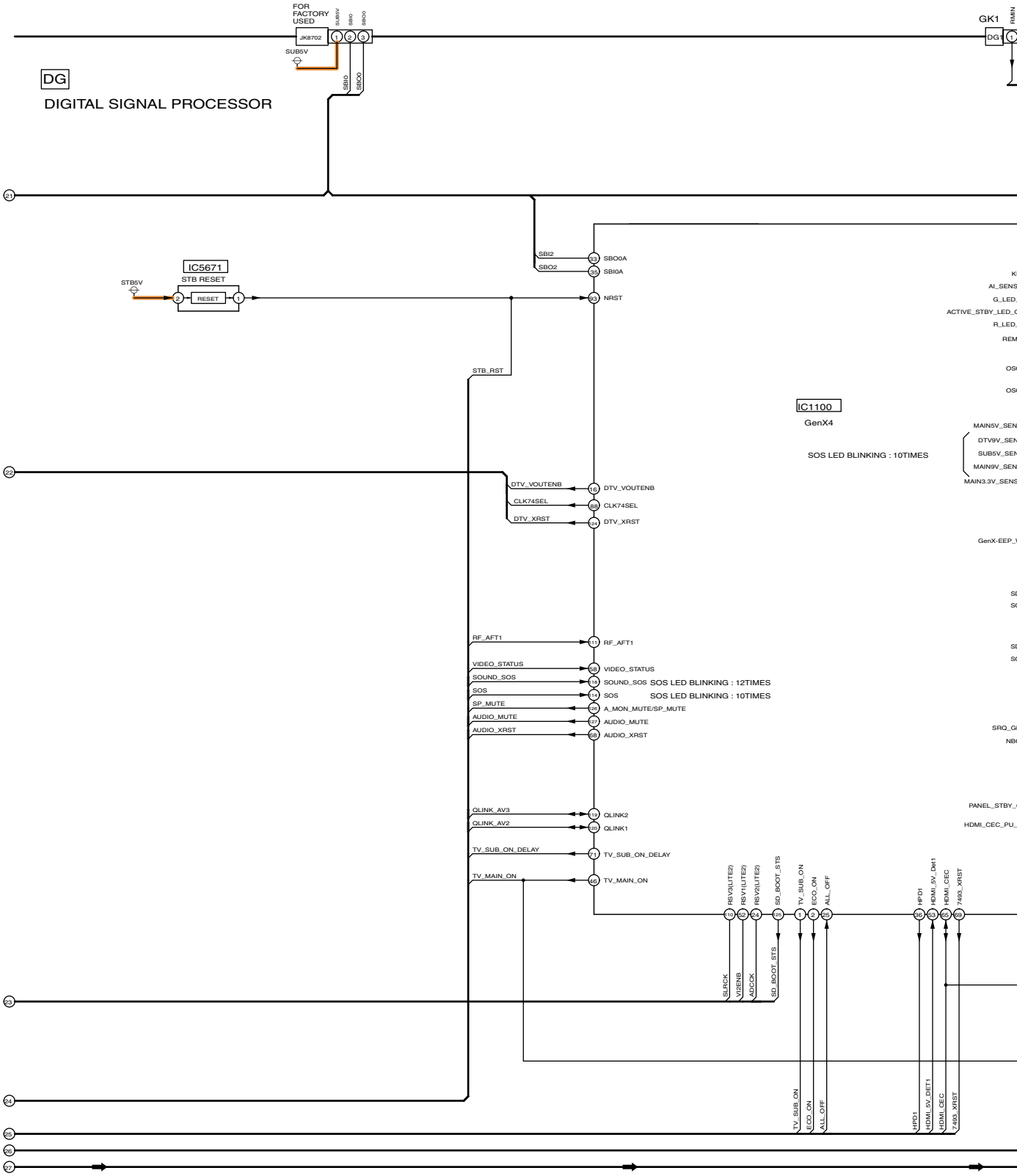

TH-R42PV70K
DG-Board (4 of 4) Block Diagram

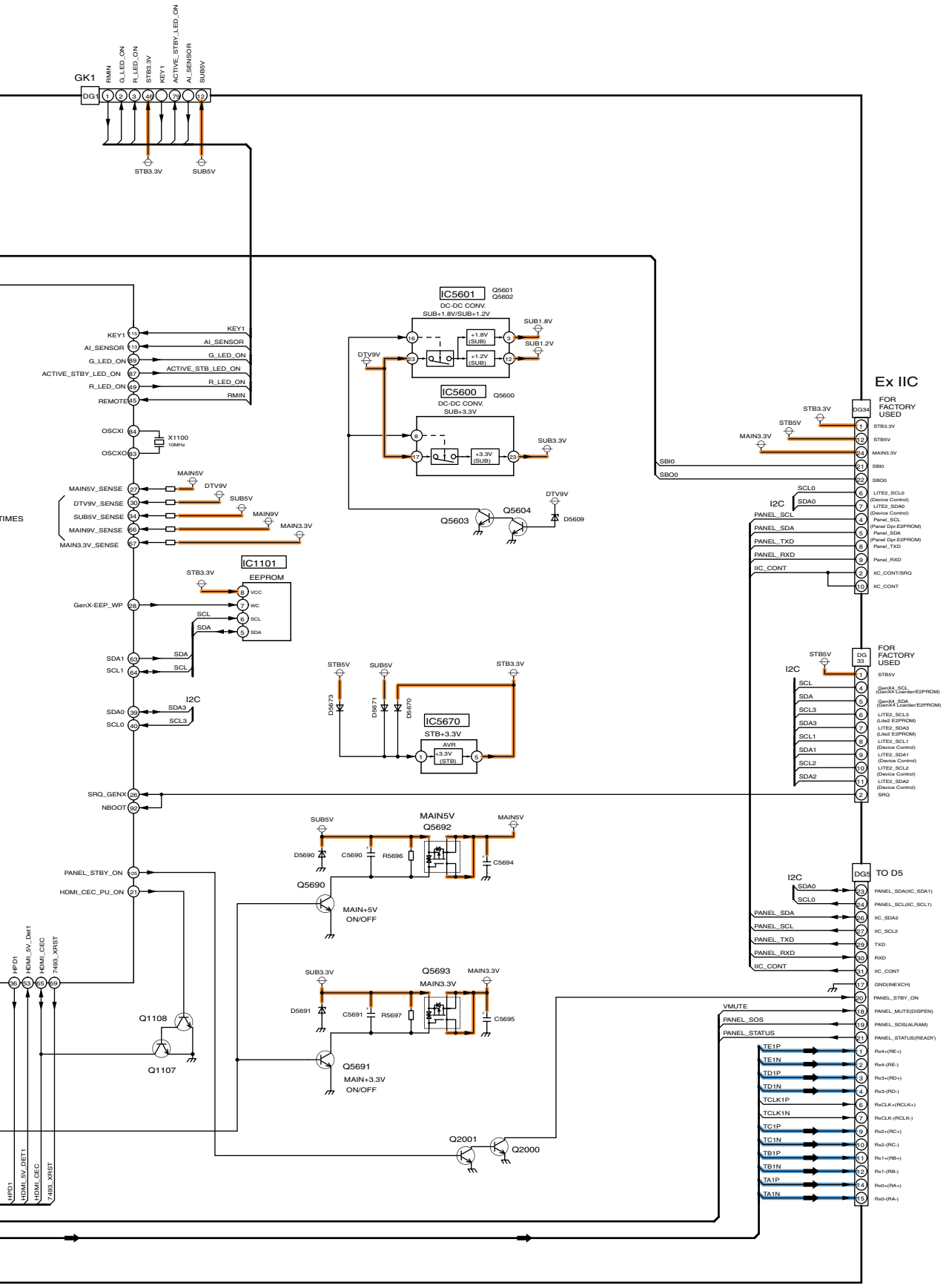

TH-R42PV70K
DG-Board (4 of 4) Block Diagram

5.16. DG-Board (1 of 13) Schematic Diagram

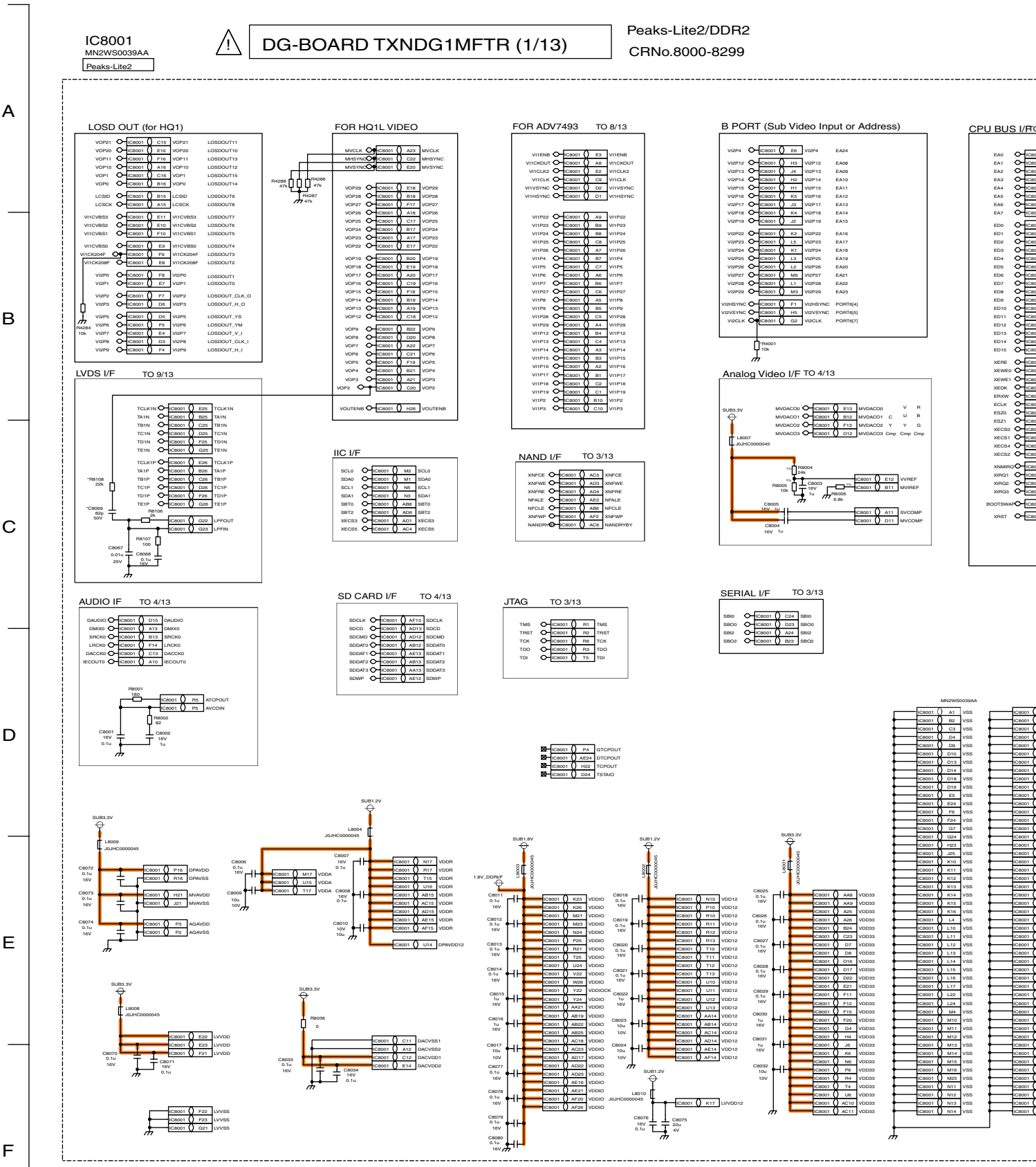

TH-R42PV70K
DG-Board (1 of 13) Schematic Diagram

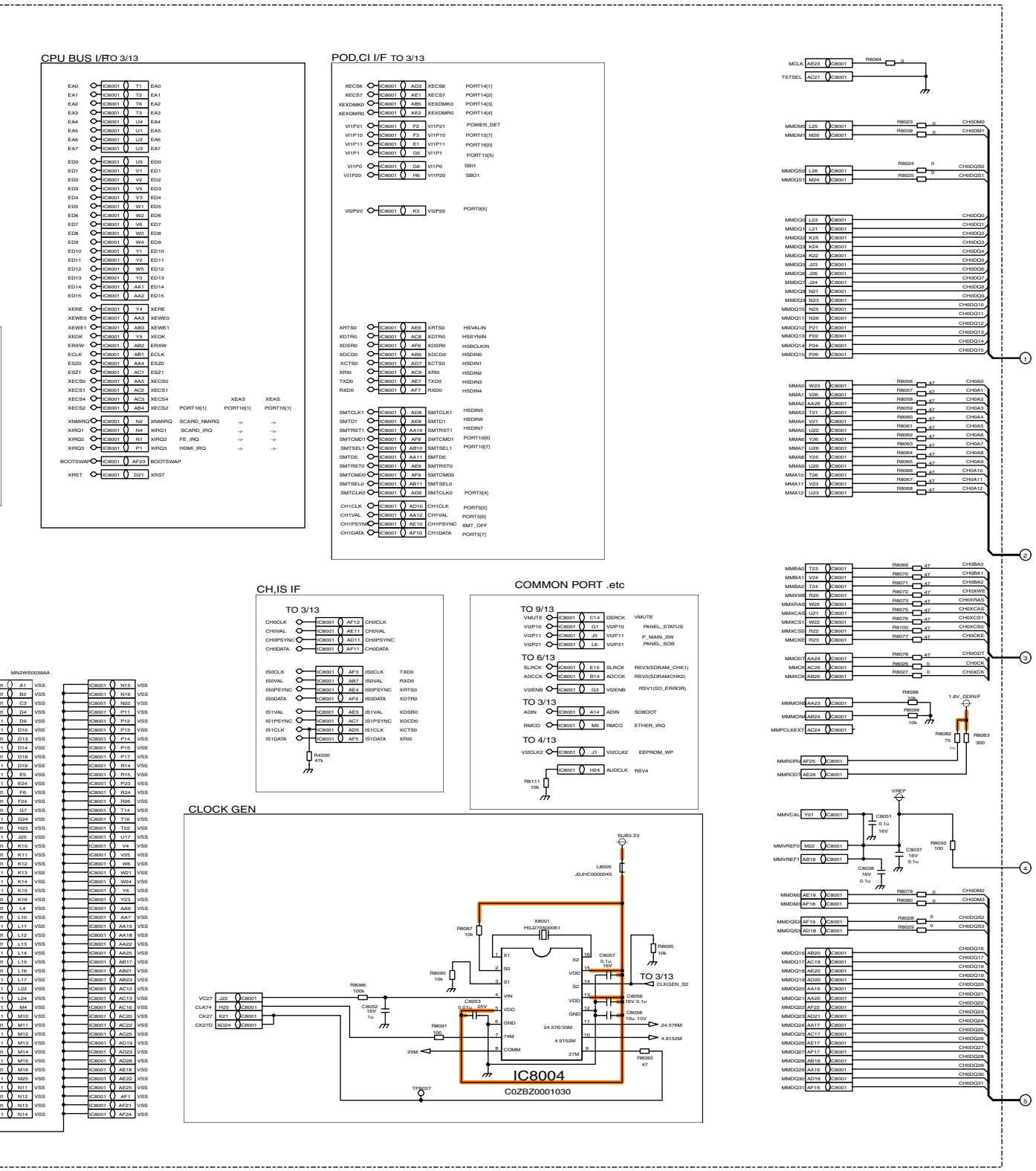

TH-R42PV70K
DG-Board (1 of 13) Schematic Diagram

5 6 7 8 9

5.17. DG-Board (2 of 13) Schematic Diagram

DG-BOARD TXNDG1MFTR (2/13)

Peaks-Lite2/DDR2
CRNo.8000-8299

POWER-SUPPLY
CRNo.4900-4999

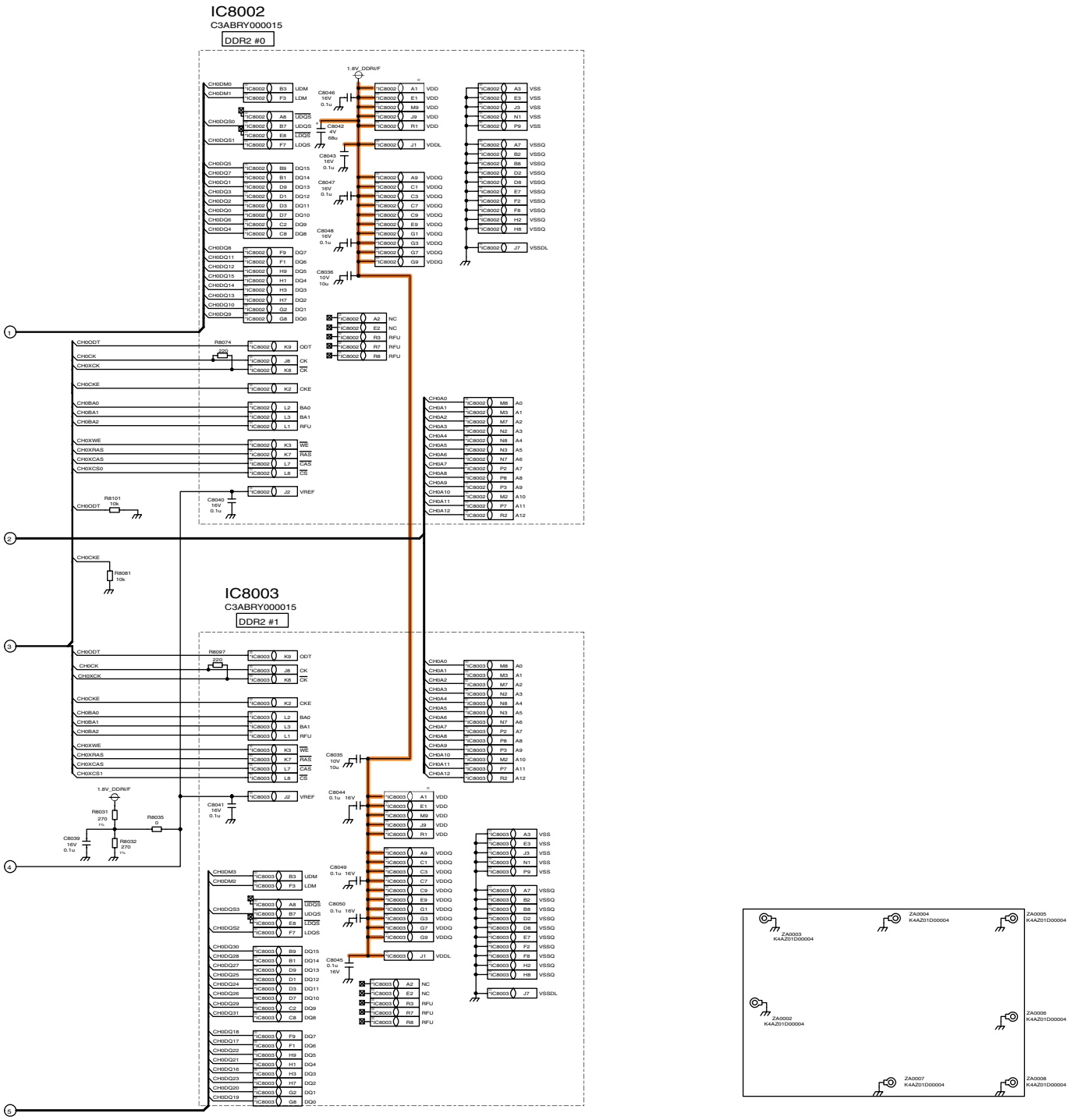

TH-R42PV70K
DG-Board (2 of 13) Schematic Diagram

10 11 12 13 14

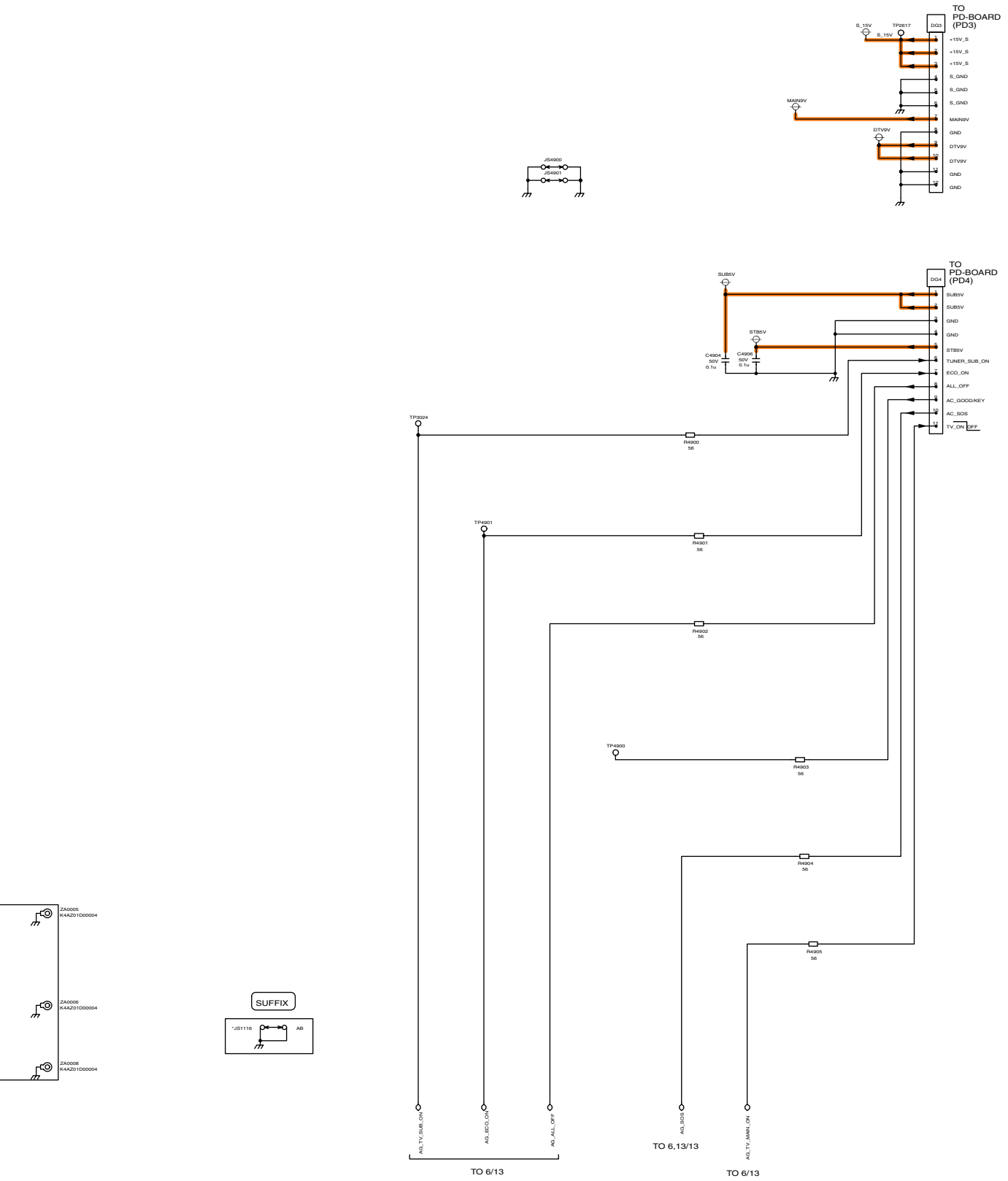

TH-R42PV70K
DG-Board (2 of 13) Schematic Diagram

14 15 16 17 18

5.18. DG-Board (3 of 13) Schematic Diagram

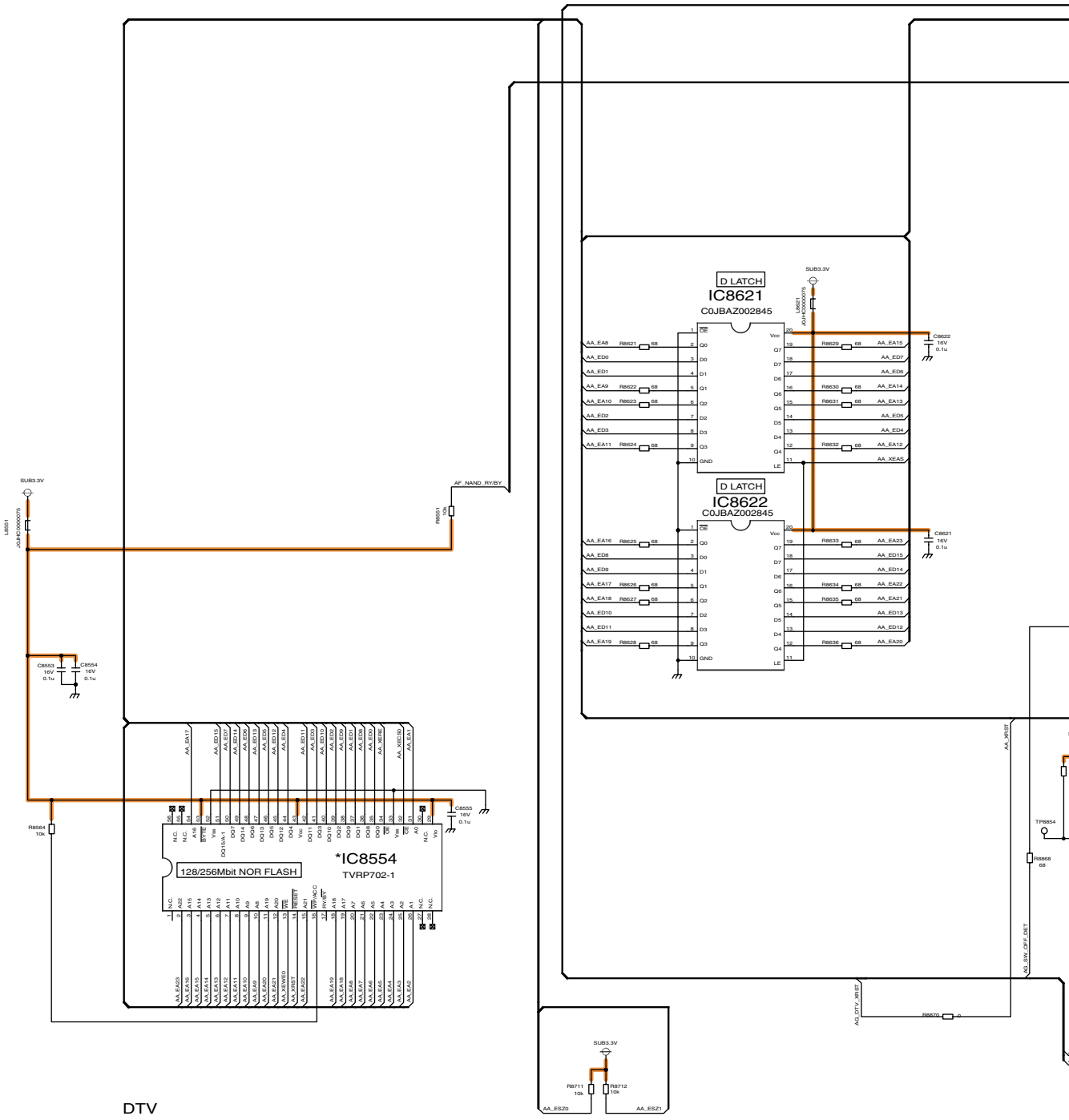

DTV

CRNo.8300-8999

FE 8300-8399
CI 8400-8499
AV_OUT 8500-8549
NAND/NOR 8550-8599
EEPROM 8600-8619
D-LATCH 8620-8649
SMART_CARD 8650-8699
SUPPORT_CARD 8700-8799
SD_CARD 8800-8849
MPEG 8850-8949
MODEM 8950-8999

⚠ DG-BOARD TXNDG1MFTR (3/13)

TH-R42PV70K
DG-Board (3 of 13) Schematic Diagram

19 20 21 22 23

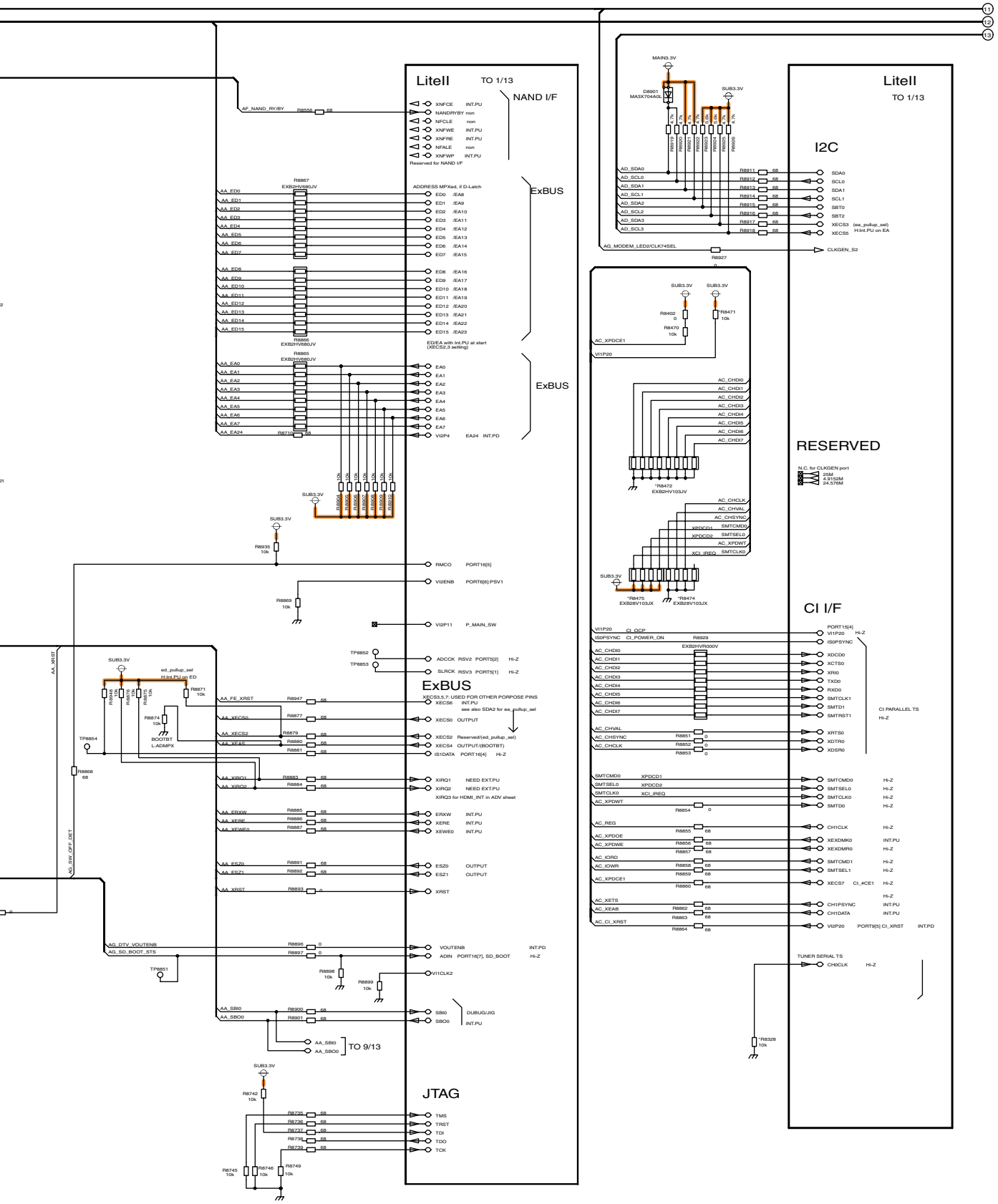

TH-R42PV70K
DG-Board (3 of 13) Schematic Diagram

23 24 25 26 27

5.19. DG-Board (4 of 13) Schematic Diagram

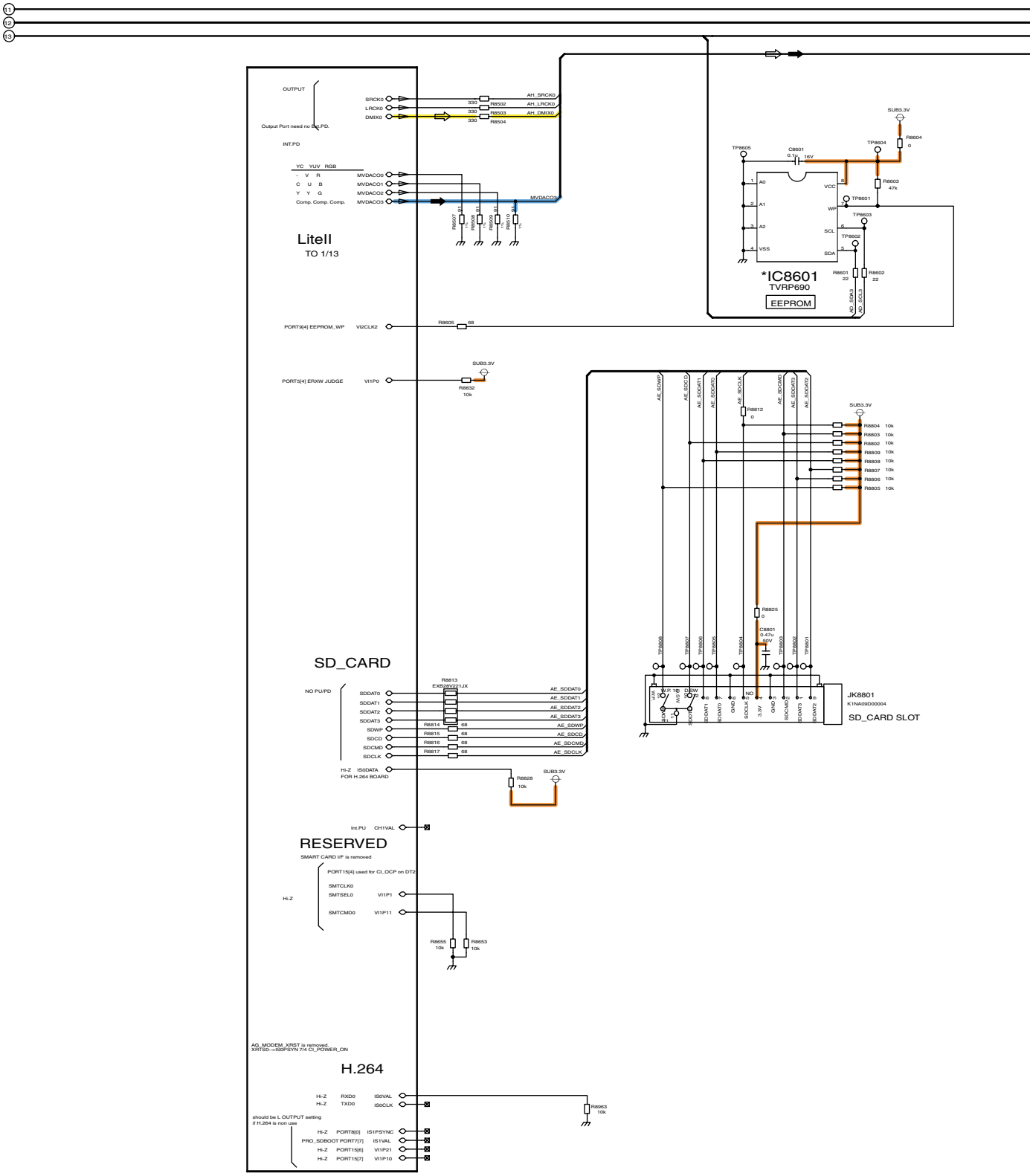

TH-R42PV70K
DG-Board (4 of 13) Schematic Diagram

28 29 30 31 32

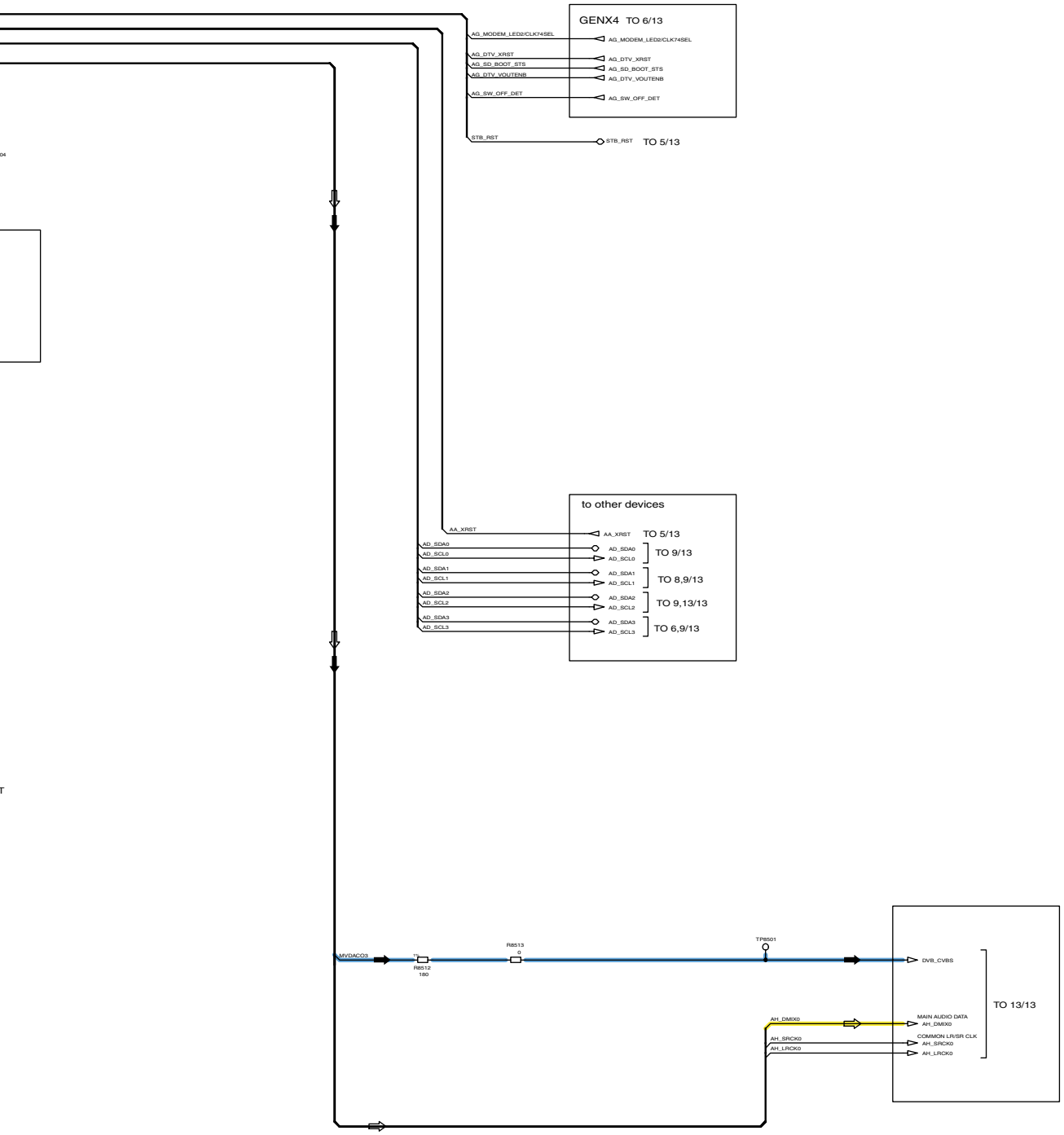

DTV

CRNo.8300-8999

FE 8300-8399
CI 8400-8499
AV_OUT 8500-8549
NAND/NOR 8550-8599
EEPROM 8600-8619
D-LATCH 8620-8649
SMART_CARD 8650-8699
SUPPORT_CARD 8700-8799
SD_CARD 8800-8849
MPEG 8850-8949
MODEM 8950-8999

⚠ DG-BOARD TXNDG1MFTR (4/13)

TH-R42PV70K
DG-Board (4 of 13) Schematic Diagram

32 33 34 35 36

5.20. DG-Board (5 of 13) Schematic Diagram

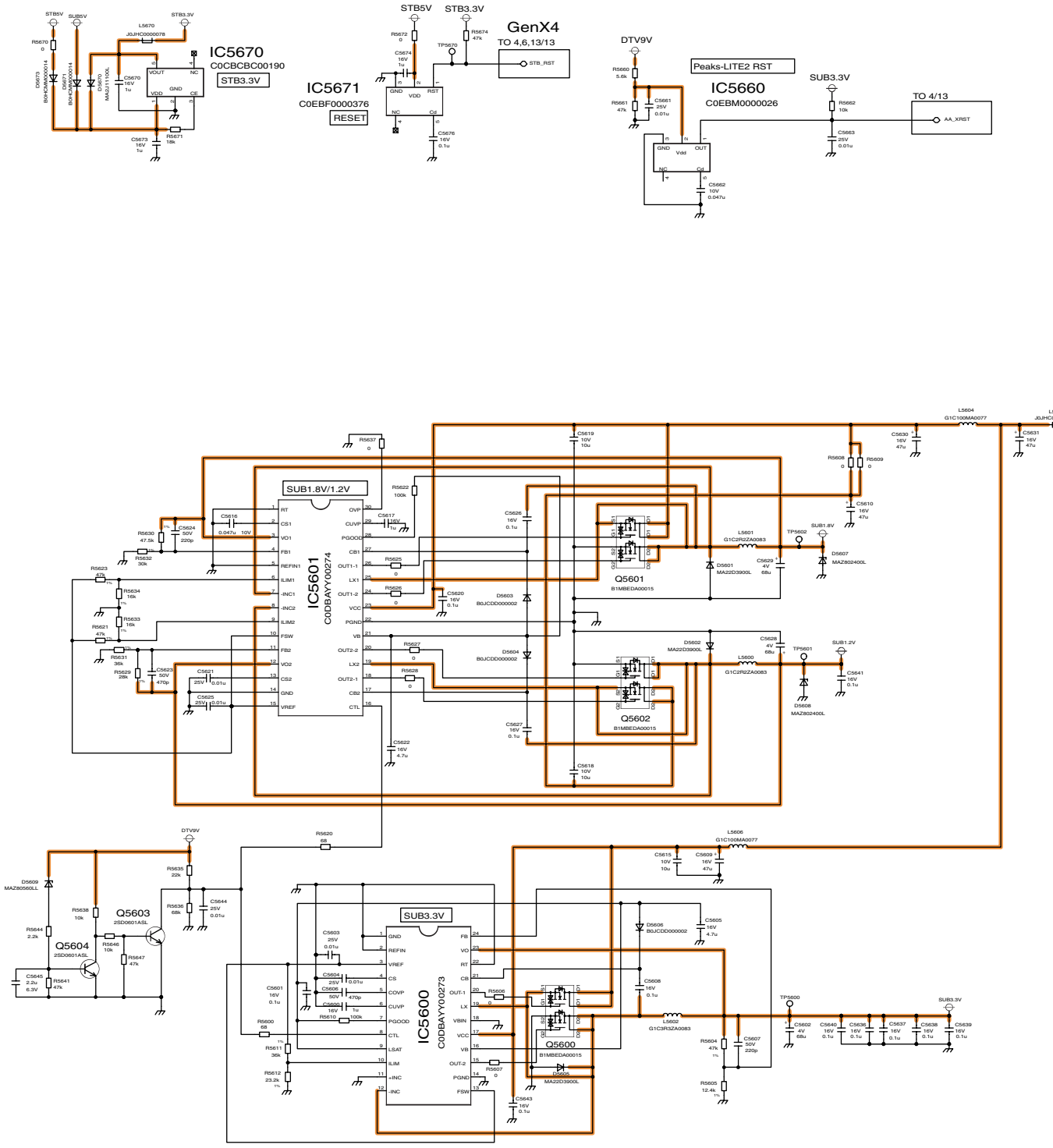

TH-R42PV70K
DG-Board (5 of 13) Schematic Diagram

37	38	39	40	41

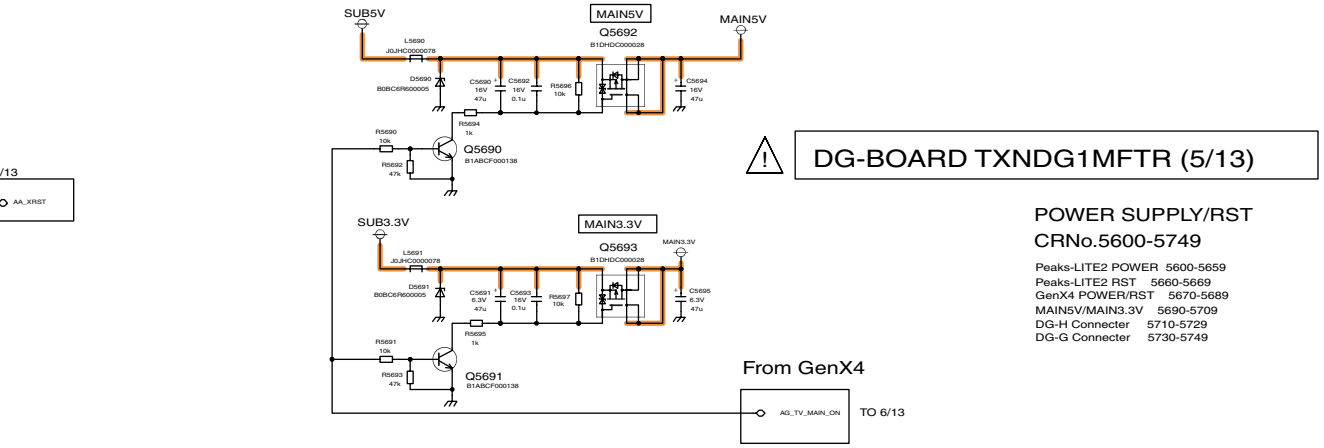

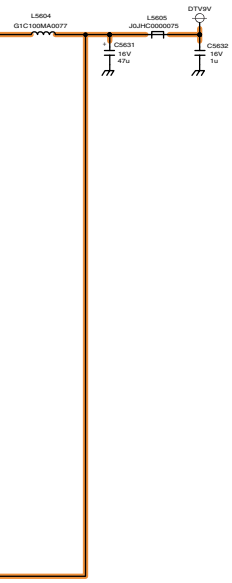

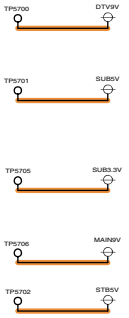

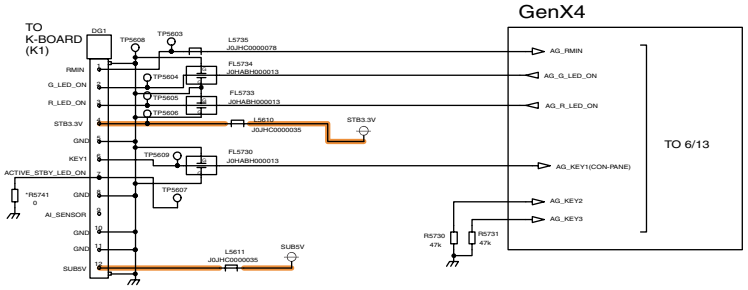

TH-R42PV70K
DG-Board (5 of 13) Schematic Diagram

41 42 43 44 45

5.21. DG-Board (6 of 13) Schematic Diagram

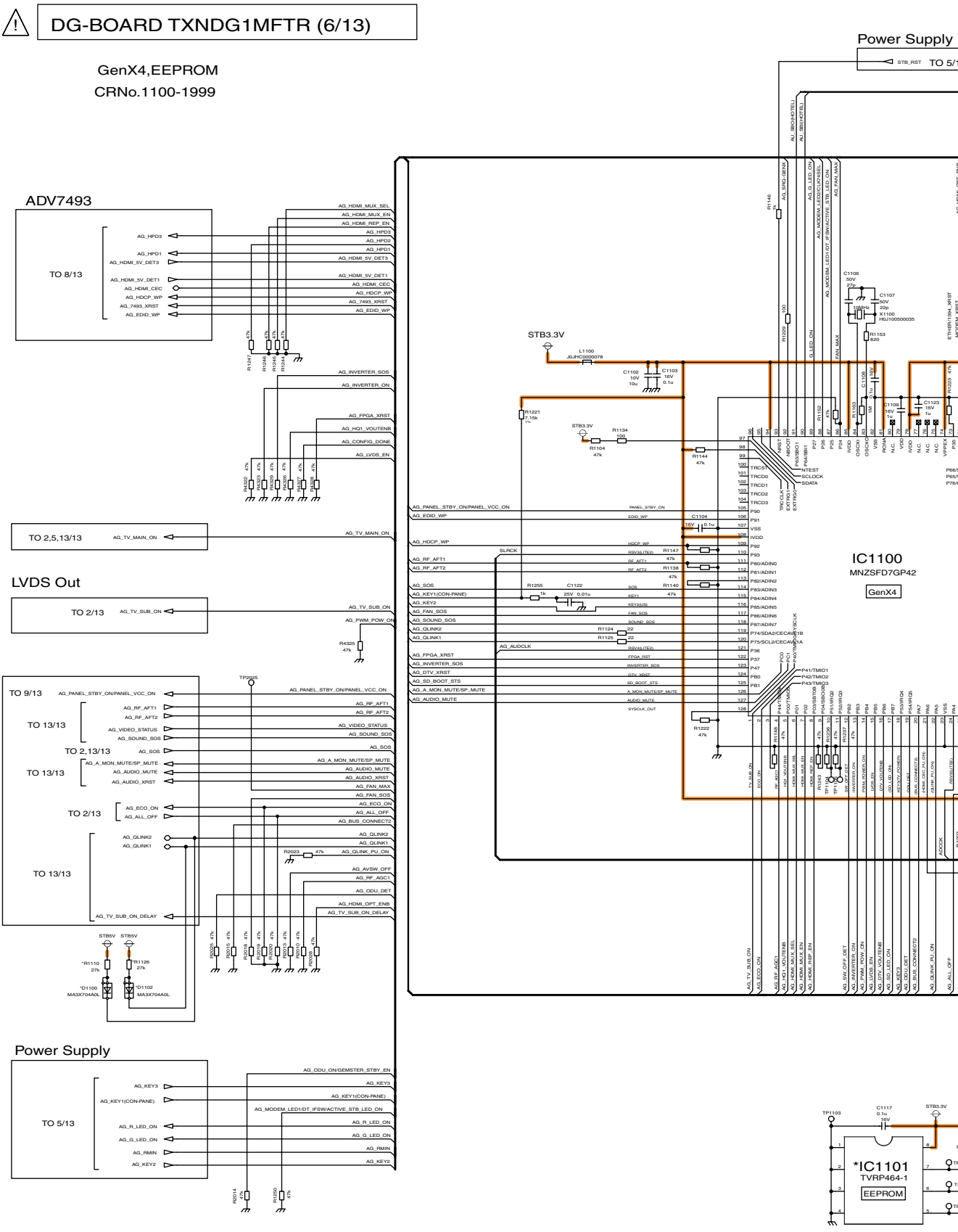

TH-R42PV70K
DG-Board (6 of 13) Schematic Diagram

46 47 48 49 50

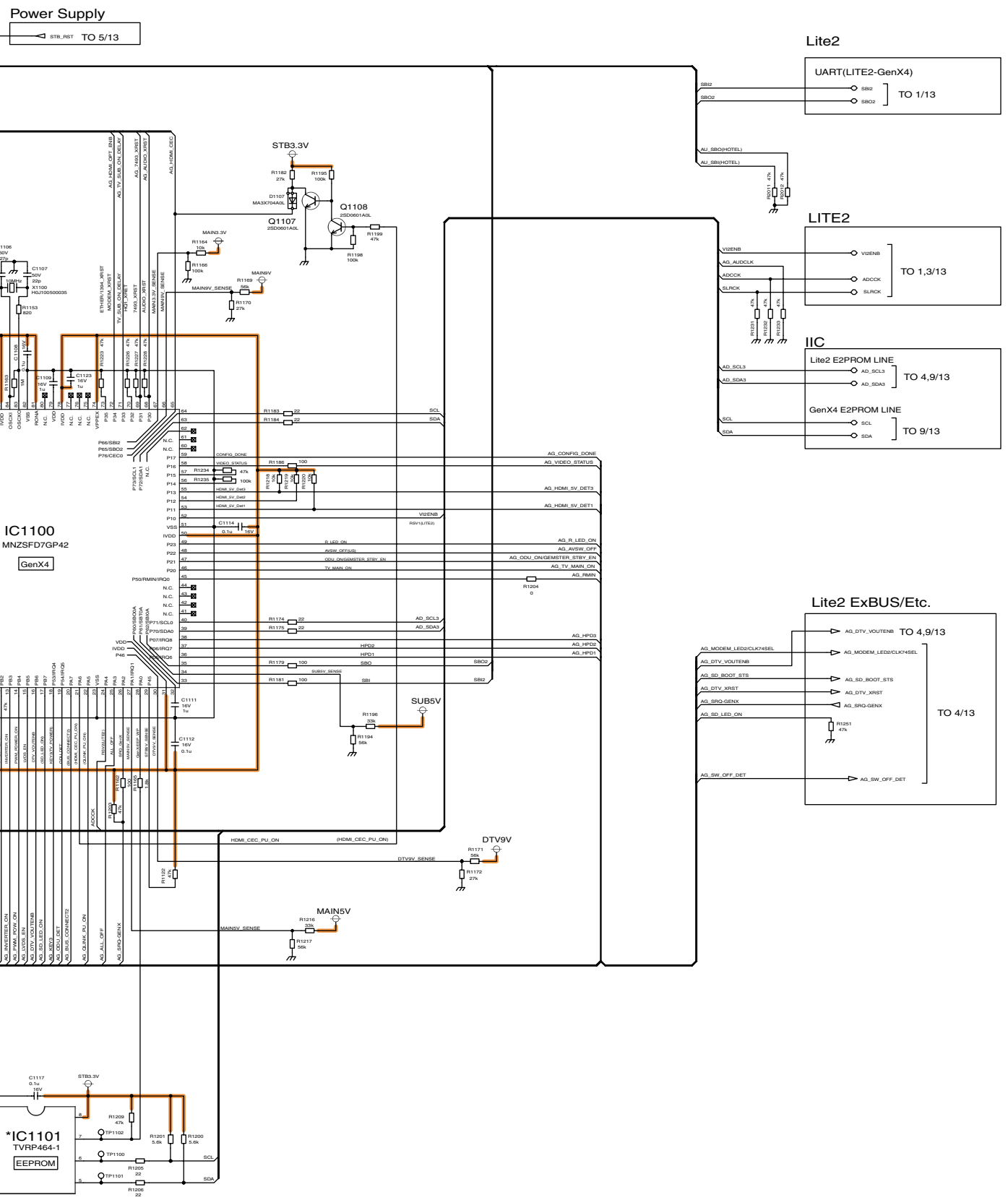

TH-R42PV70K
DG-Board (6 of 13) Schematic Diagram

50 51 52 53 54

5.22. DG-Board (7 of 13) Schematic Diagram

DG-BOARD TXNDG1MFTR (7/13)

ADV7493,HDMI-Mux
CRNo.4500-4799

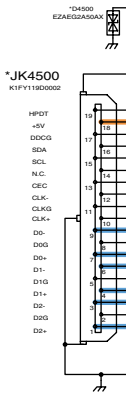

TH-R42PV70K
DG-Board (7 of 13) Schematic Diagram

55 | 56 | 57 | 58 | 59

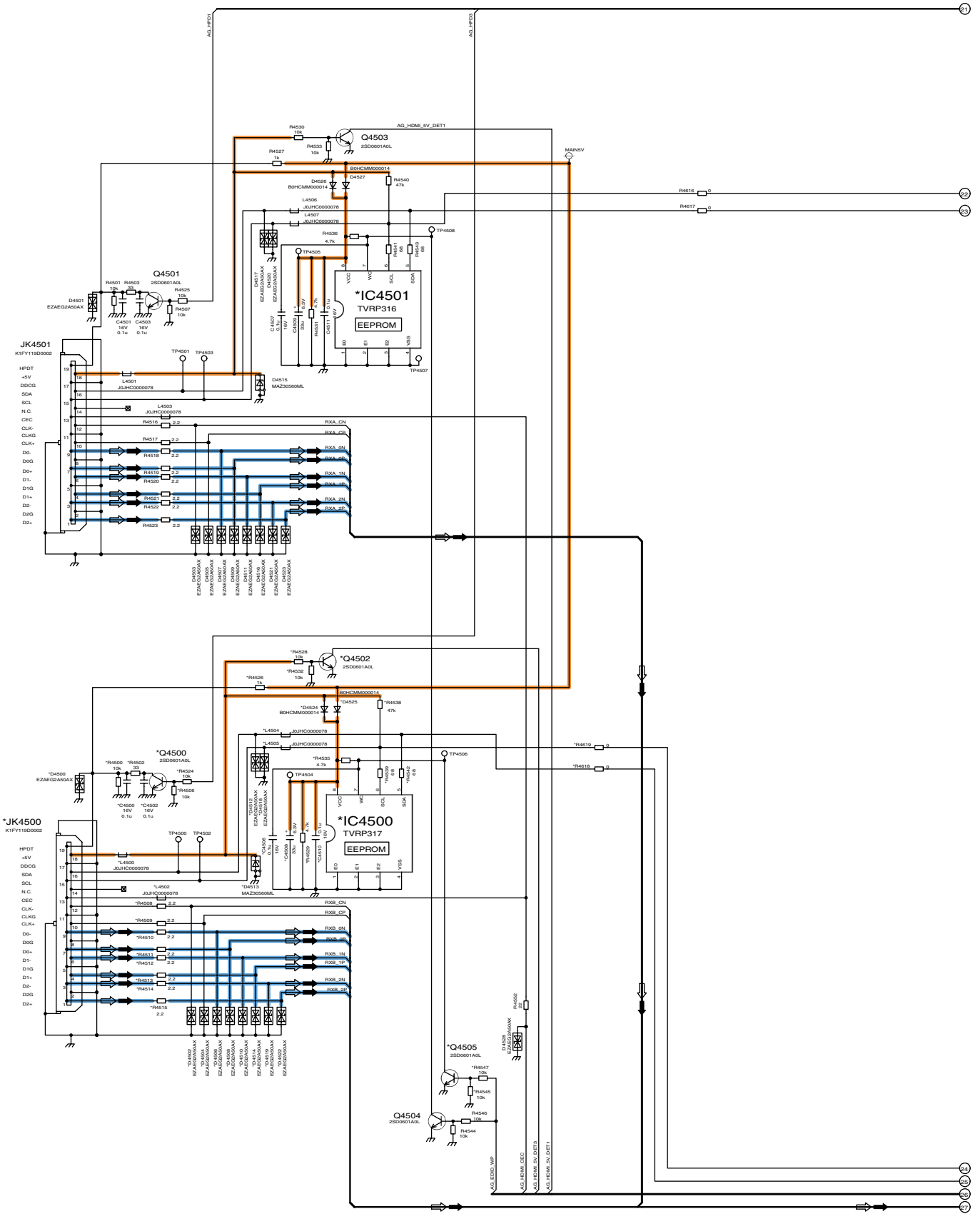

TH-R42PV70K
DG-Board (7 of 13) Schematic Diagram

59 60 61 62 63

5.23. DG-Board (8 of 13) Schematic Diagram

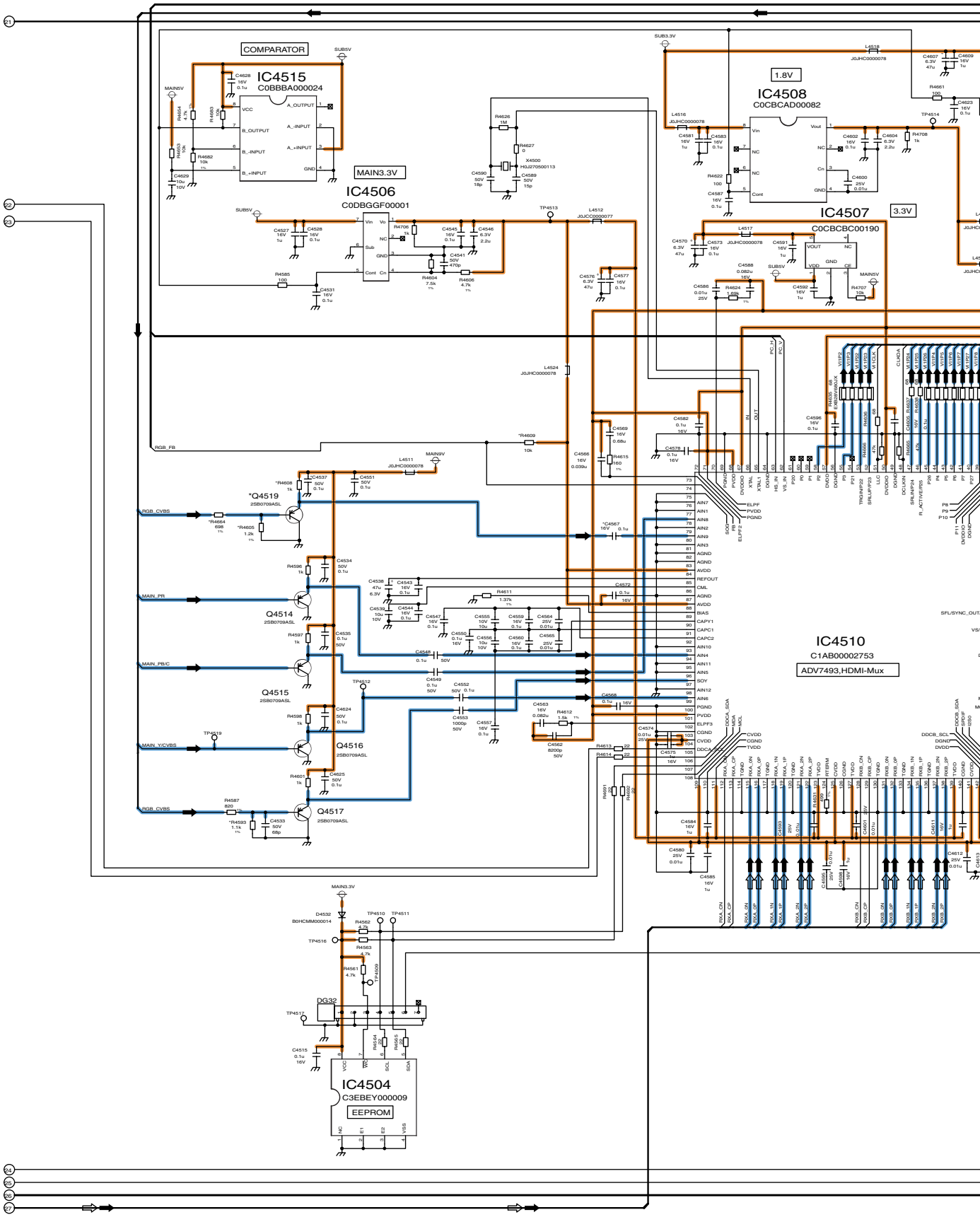

TH-R42PV70K
DG-Board (8 of 13) Schematic Diagram

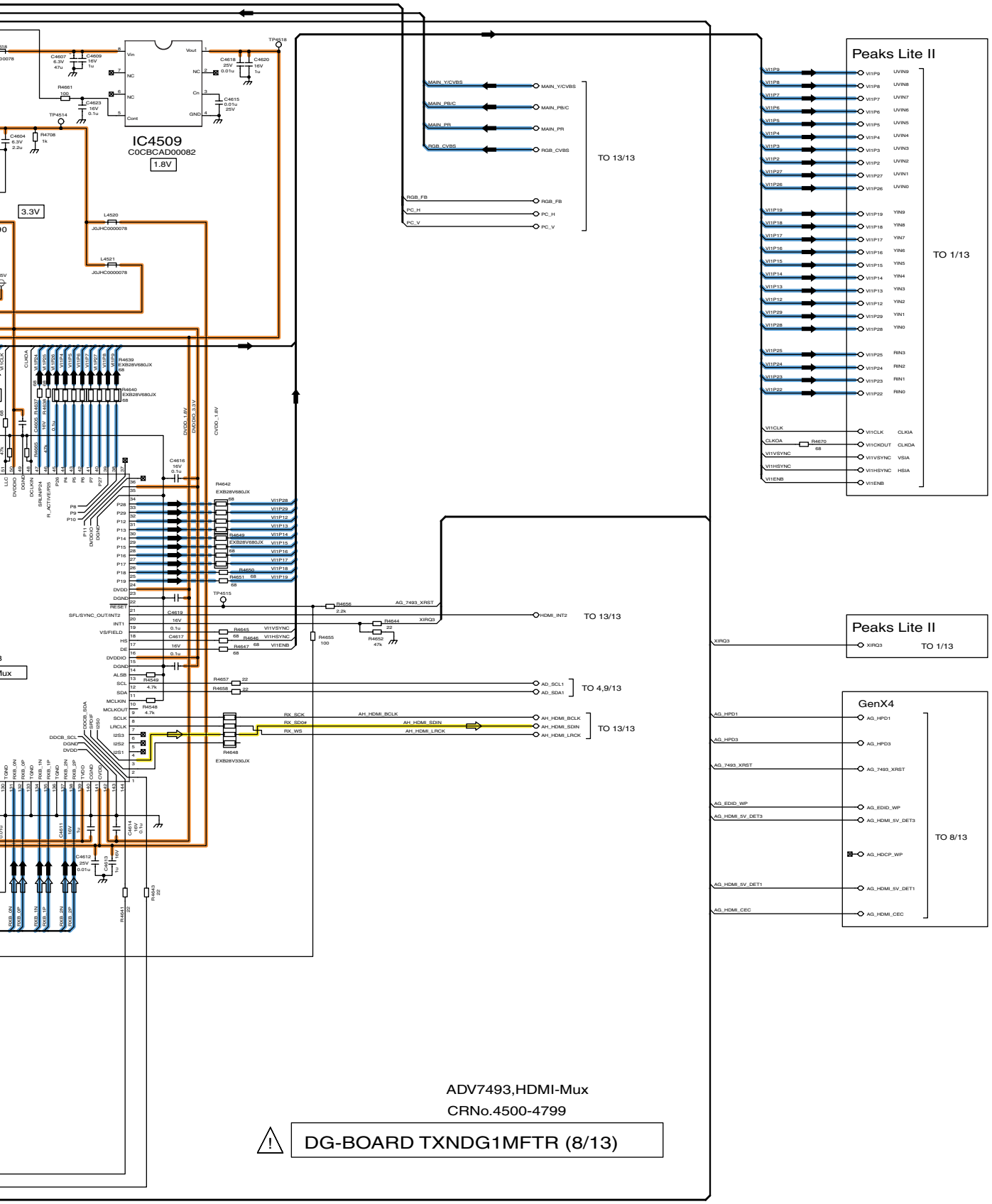

TH-R42PV70K
DG-Board (8 of 13) Schematic Diagram

68 69 70 71 72

5.24. DG-Board (9 of 13) Schematic Diagram

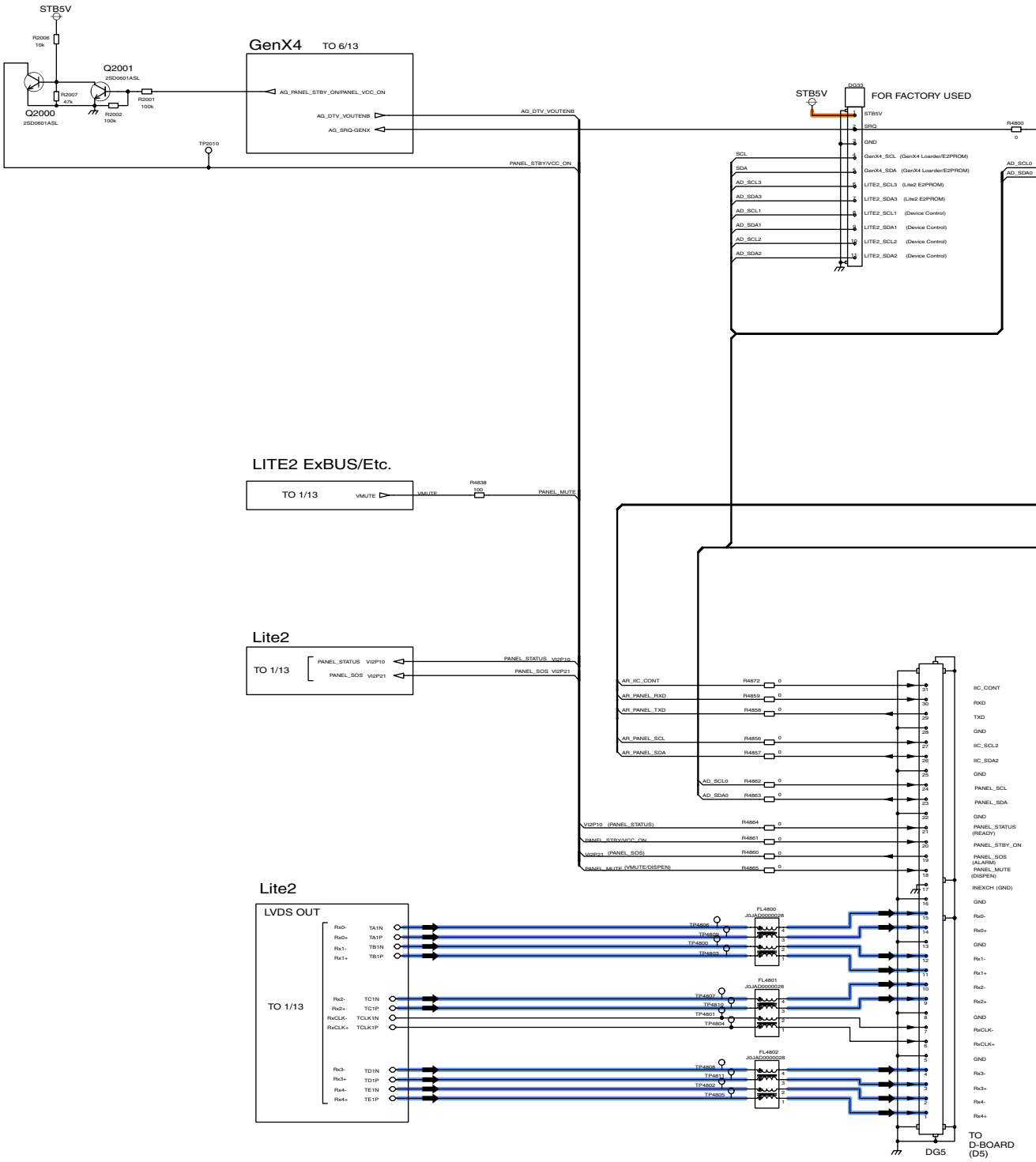

TH-R42PV70K
DG-Board (9 of 13) Schematic Diagram

73	74	75	76	77

DG-BOARD TXNDG1MFTR (9/13)

LVDS Out
CN to ExIIC
CRNo.4800-4999

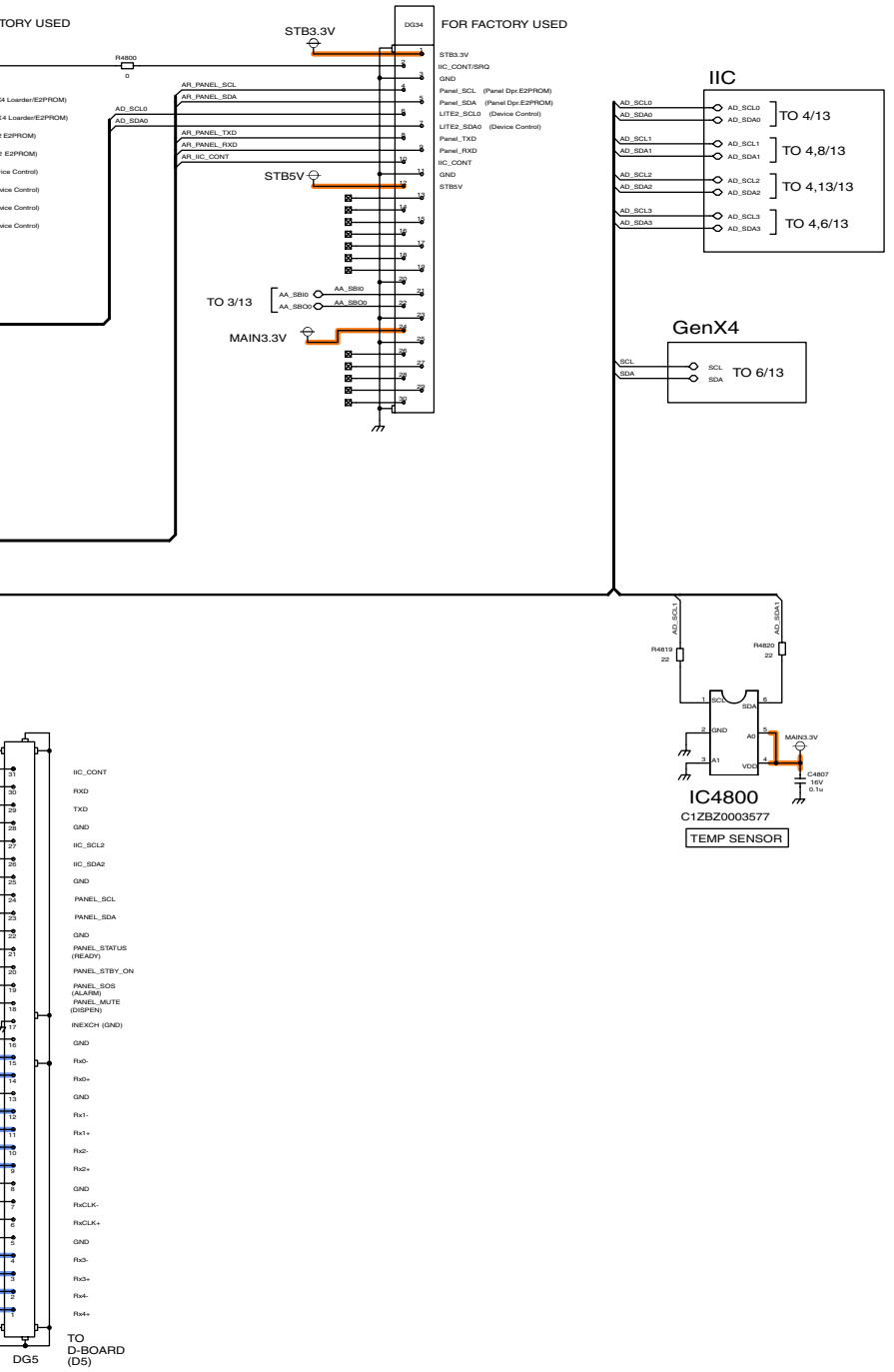

TH-R42PV70K
DG-Board (9 of 13) Schematic Diagram

77	78	79	80	81

5.25. DG-Board (10 of 13) Schematic Diagram

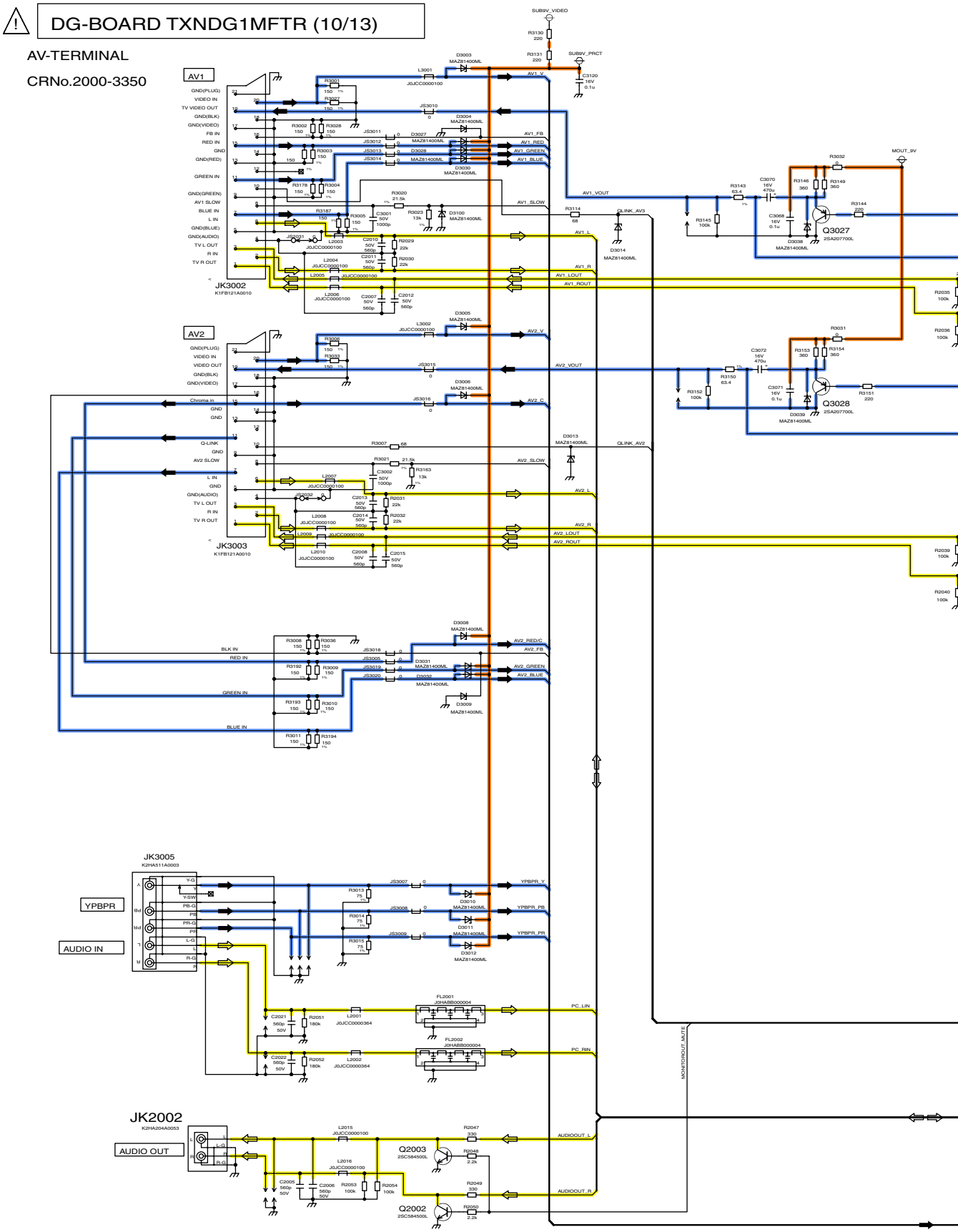

TH-R42PV70K
DG-Board (10 of 13) Schematic Diagram

82 83 84 85 86

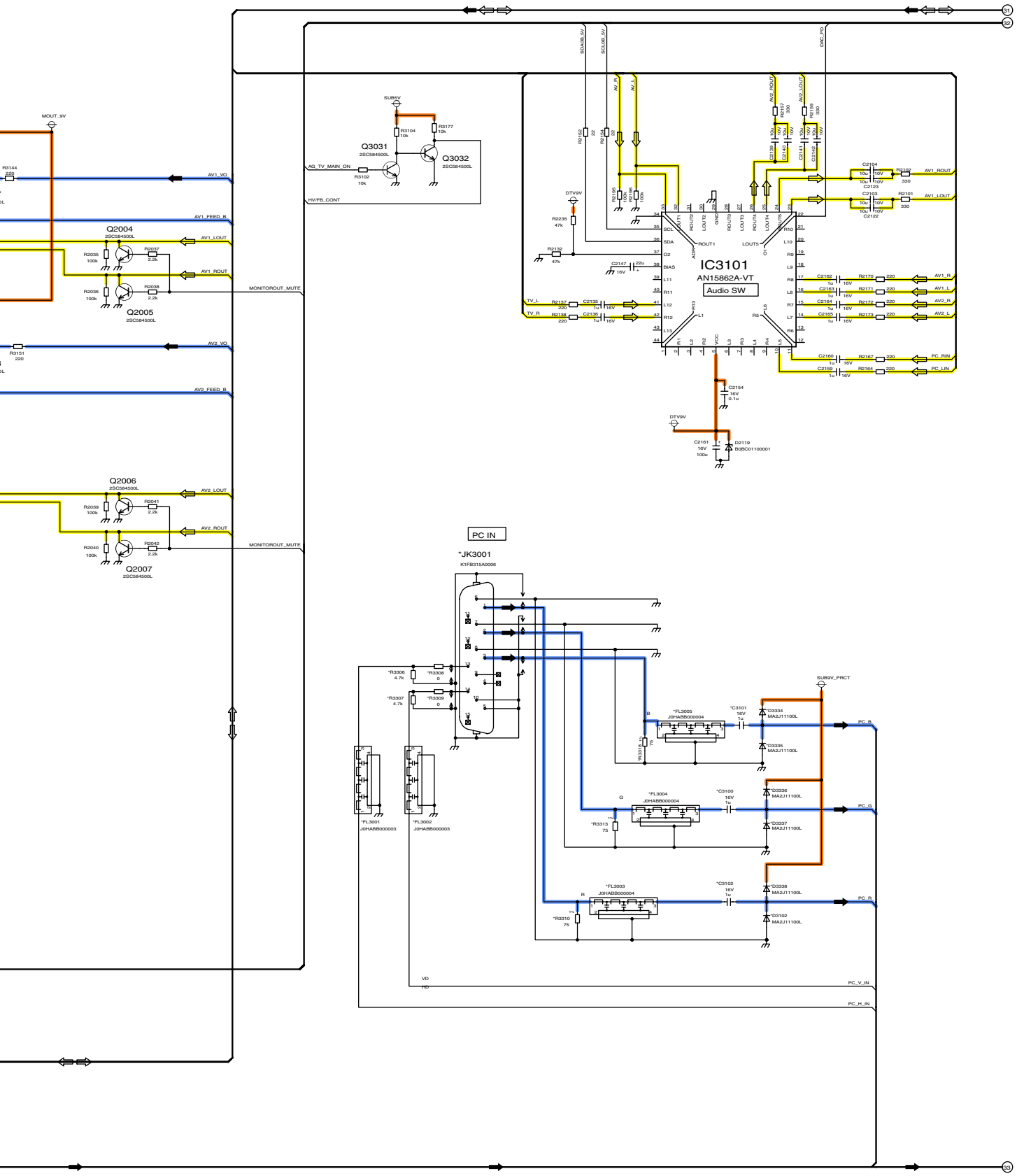

TH-R42PV70K
DG-Board (10 of 13) Schematic Diagram

86 87 88 89 90

5.26. DG-Board (11 of 13) Schematic Diagram

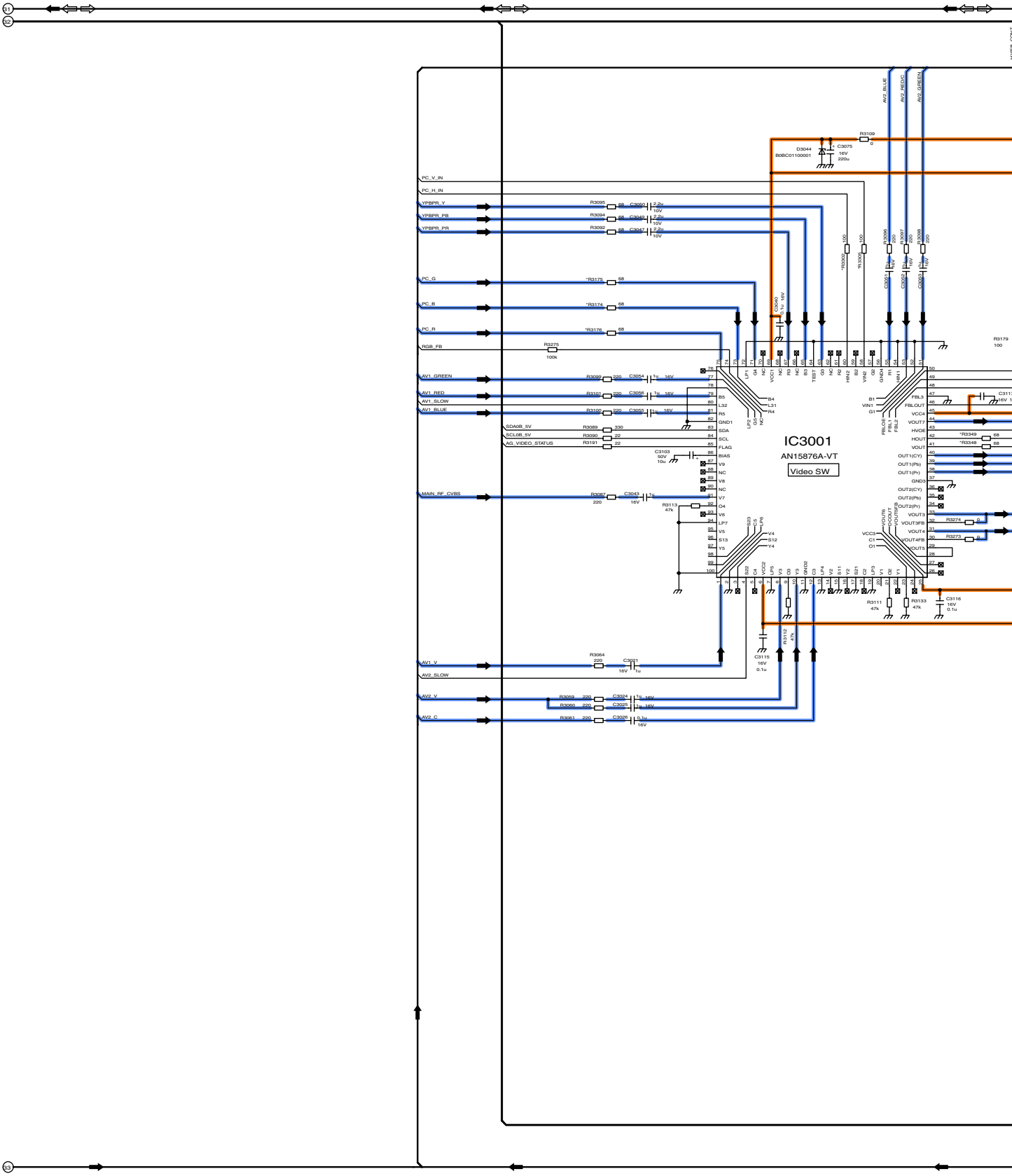

TH-R42PV70K
DG-Board (11 of 13) Schematic Diagram

91 92 93 94 95

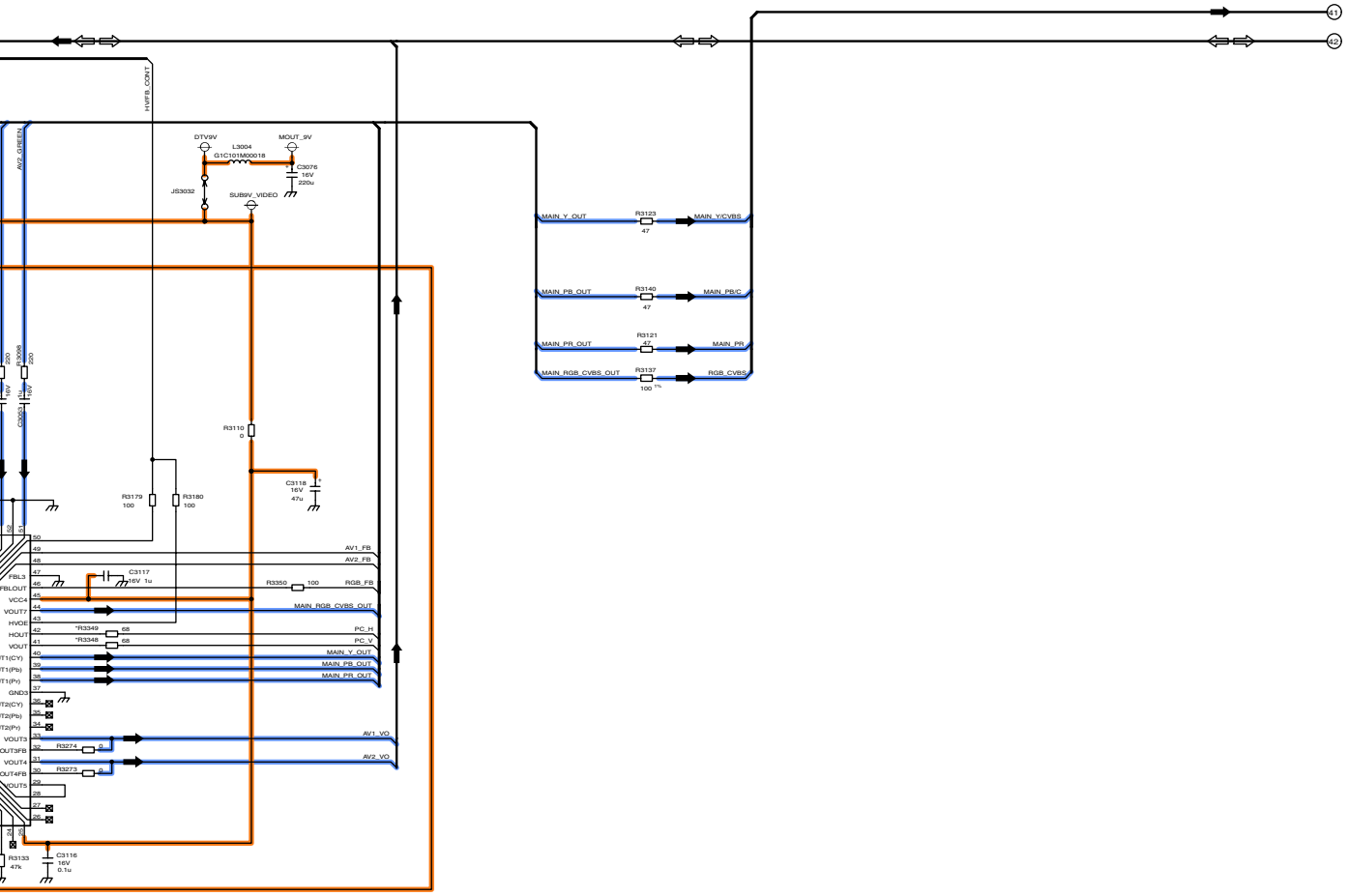

DG-BOARD TXNDG1MFTR (11/13)

AV-TERMINAL

CRNo.2000-3350

TH-R42PV70K
DG-Board (11 of 13) Schematic Diagram

95 96 97 98 99

5.27. DG-Board (12 of 13) Schematic Diagram

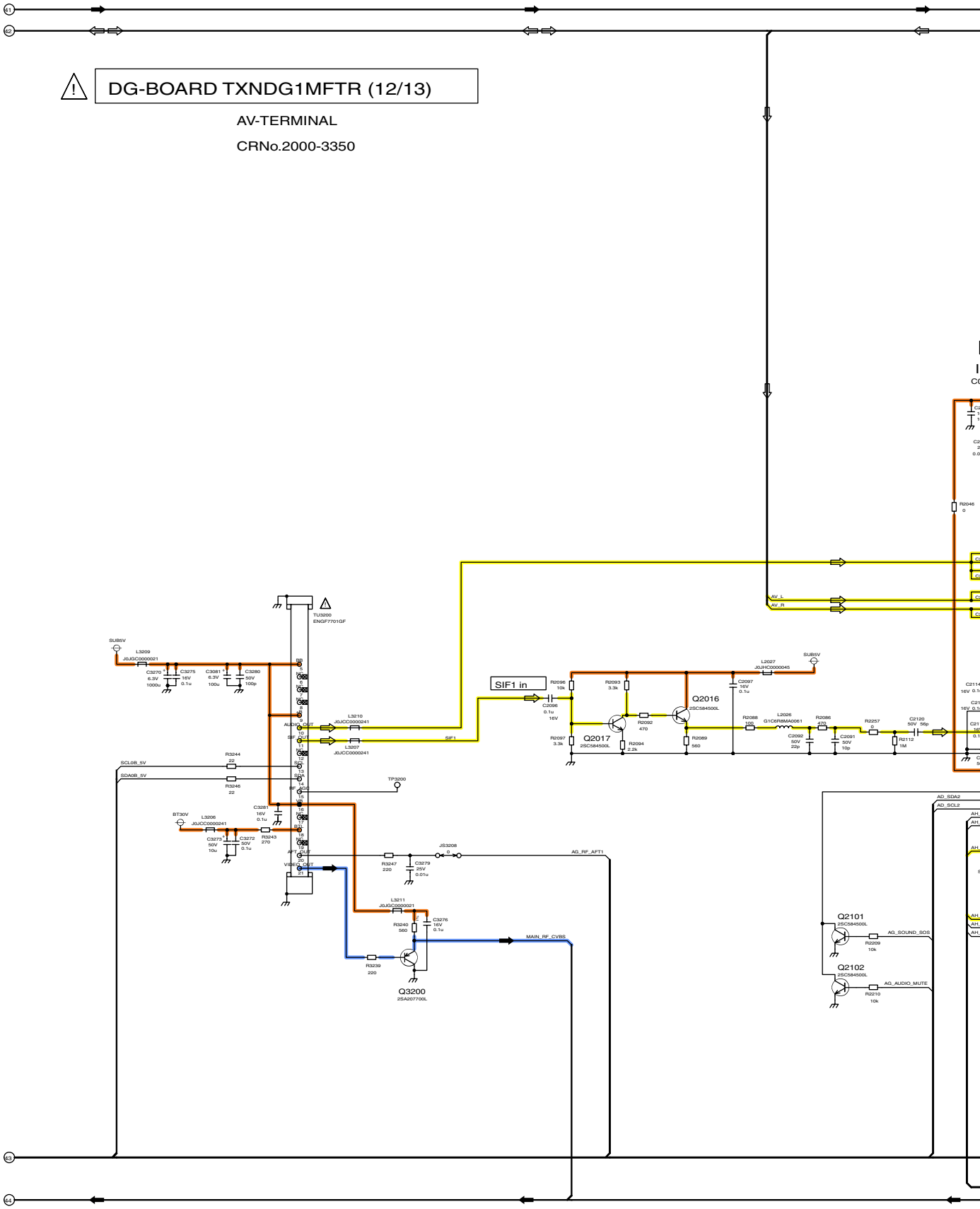

TH-R42PV70K
DG-Board (12 of 13) Schematic Diagram

100 101 102 103 104

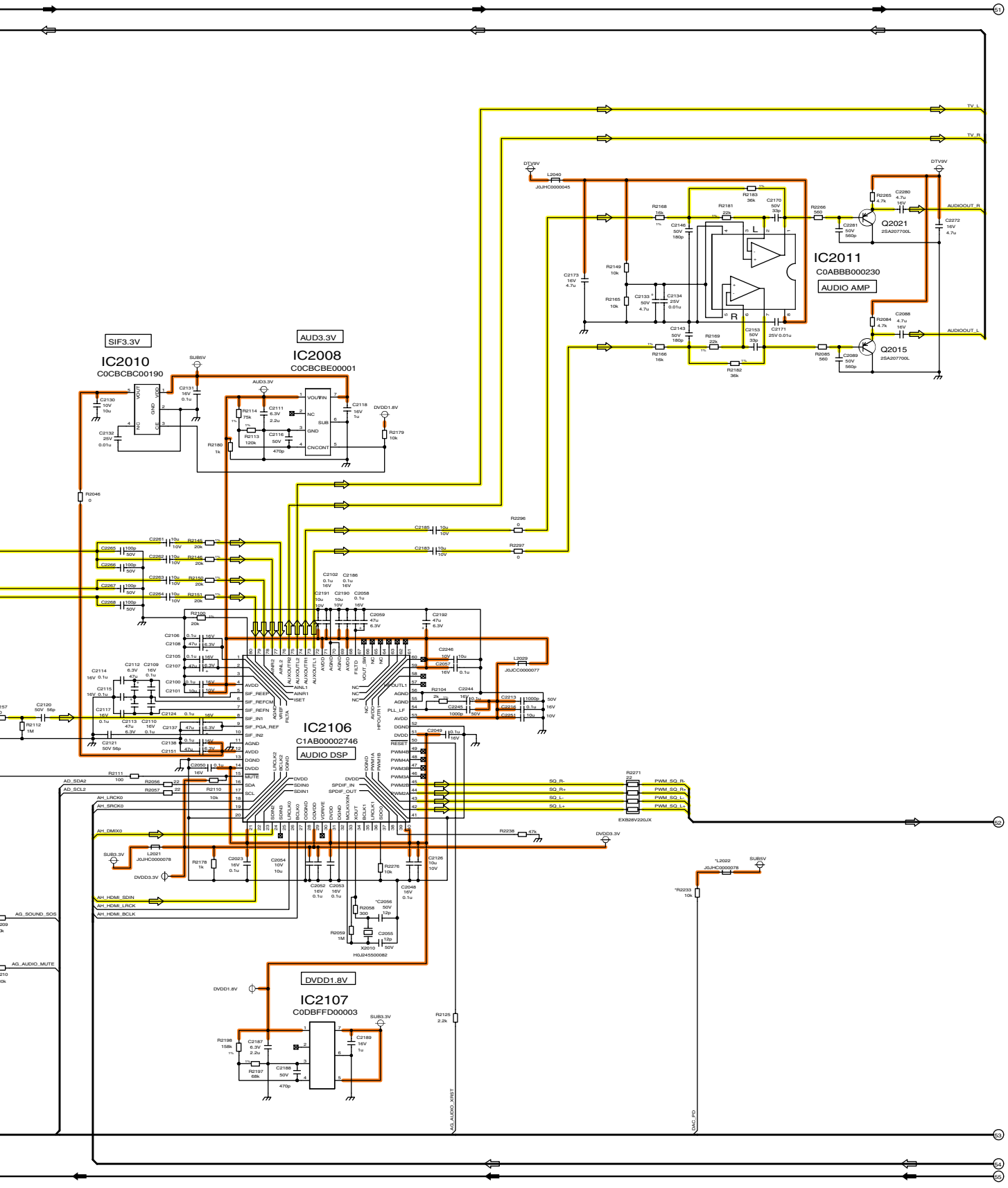

TH-R42PV70K
DG-Board (12 of 13) Schematic Diagram

104	105	106	107	108

5.28. DG-Board (13 of 13) Schematic Diagram

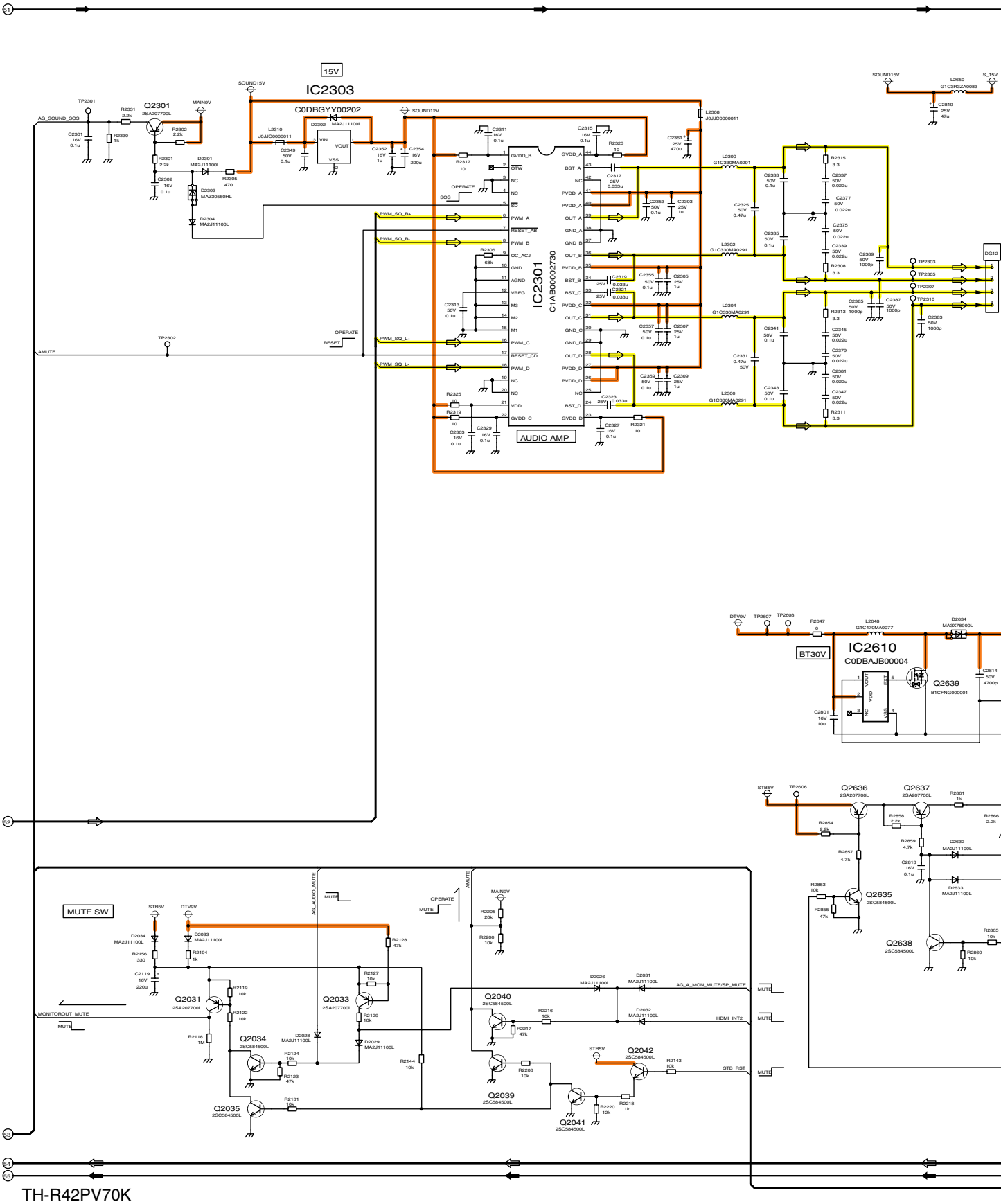

TH-R42PV70K
DG-Board (13 of 13) Schematic Diagram

109 110 111 112 113

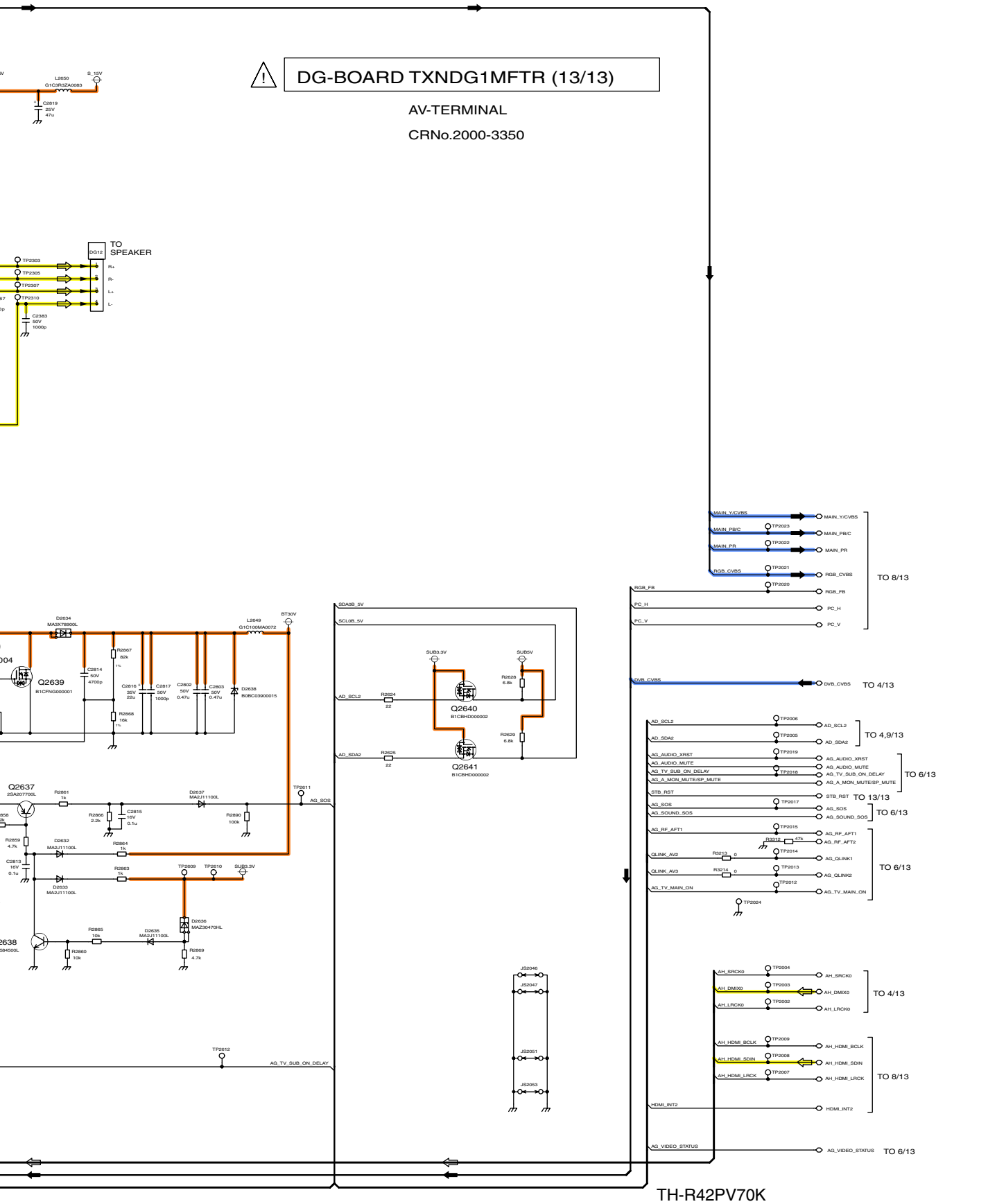

TH-R42PV70K
DG-Board (13 of 13) Schematic Diagram

113 114 115 116 117

5.29. D-Board Block Diagram

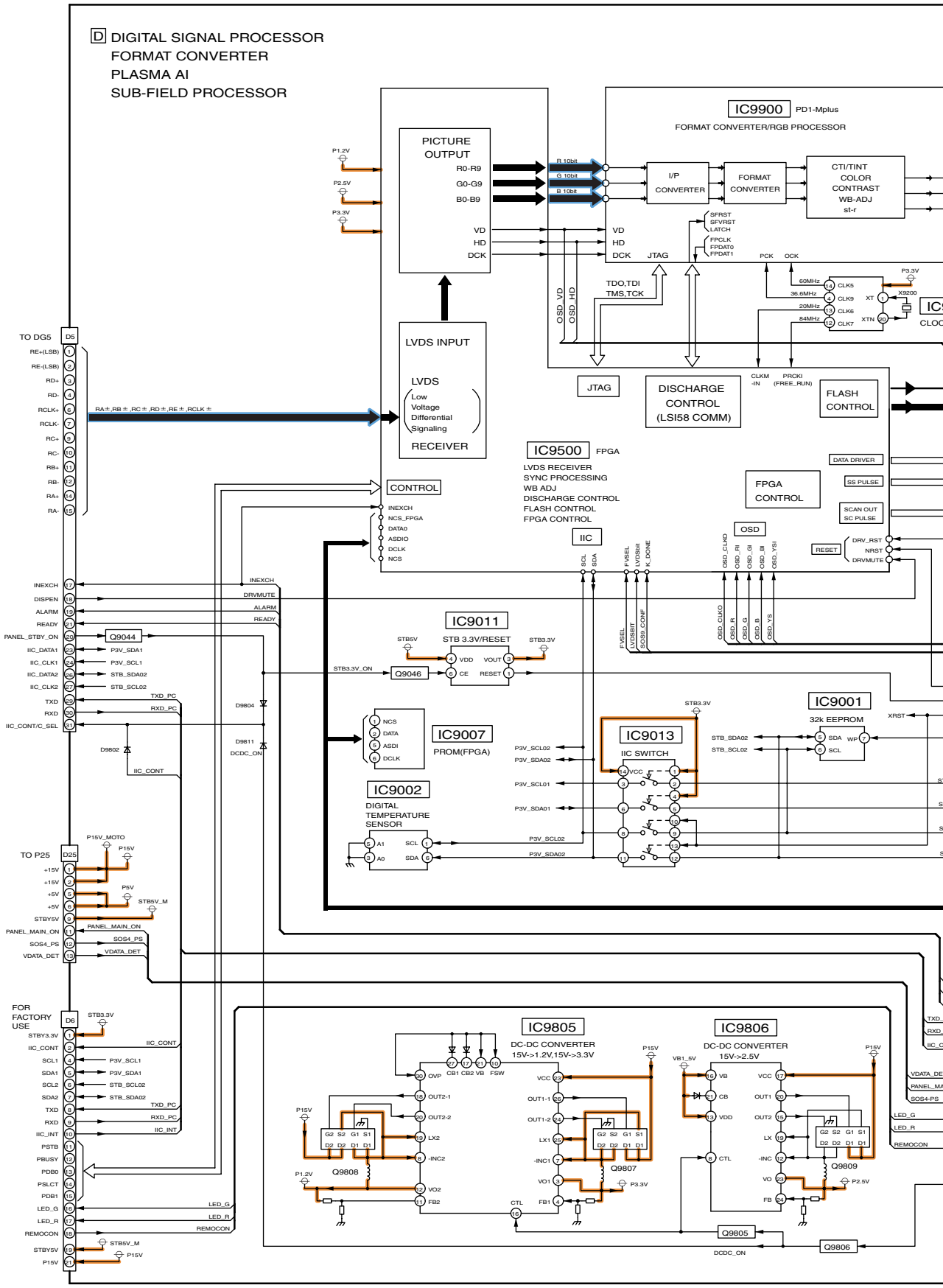

TH-R42PV70K
D-Board Block Diagram

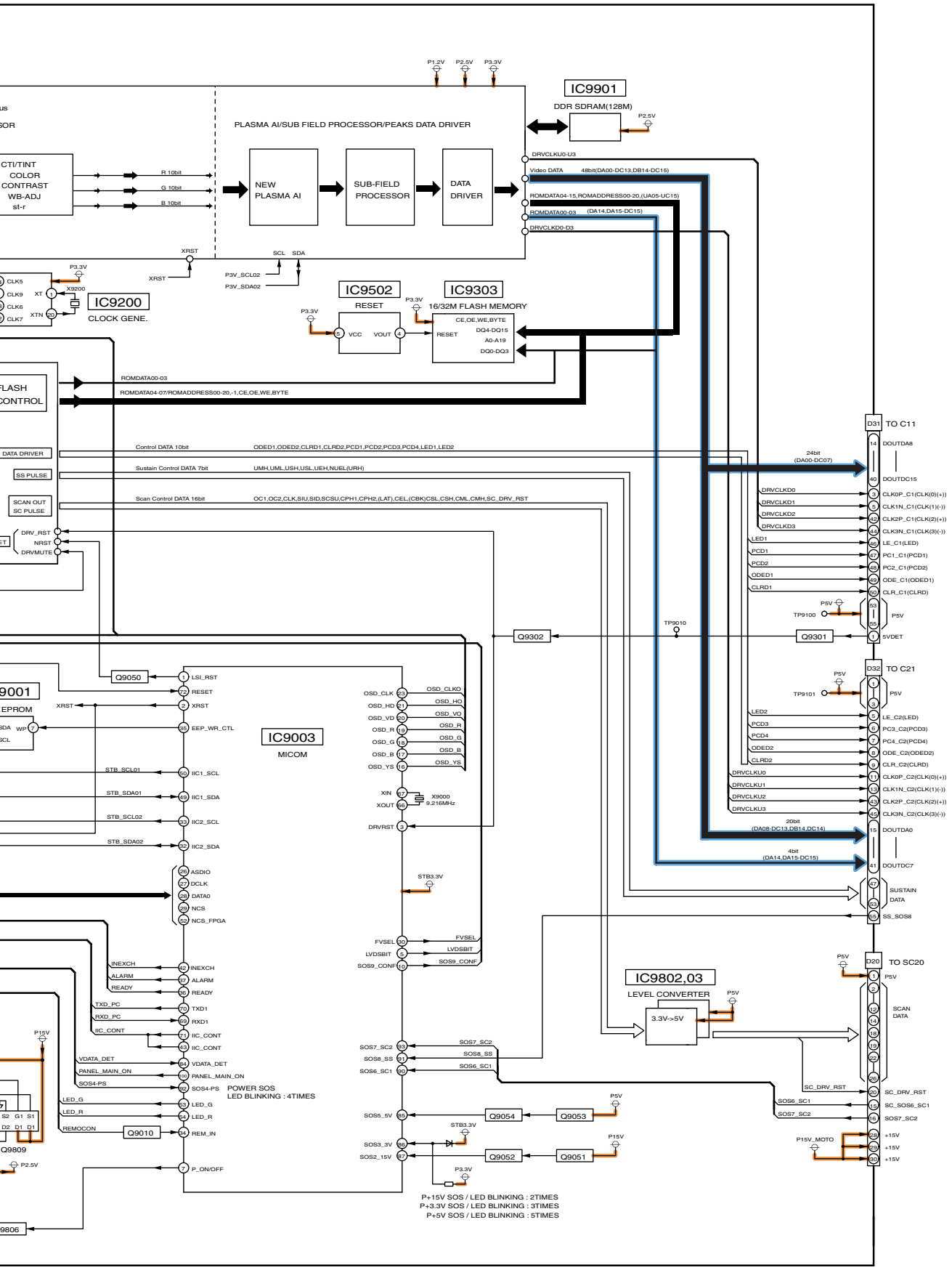

TH-R42PV70K
D-Board Block Diagram

5.30. D-Board (1 of 6) Schematic Diagram

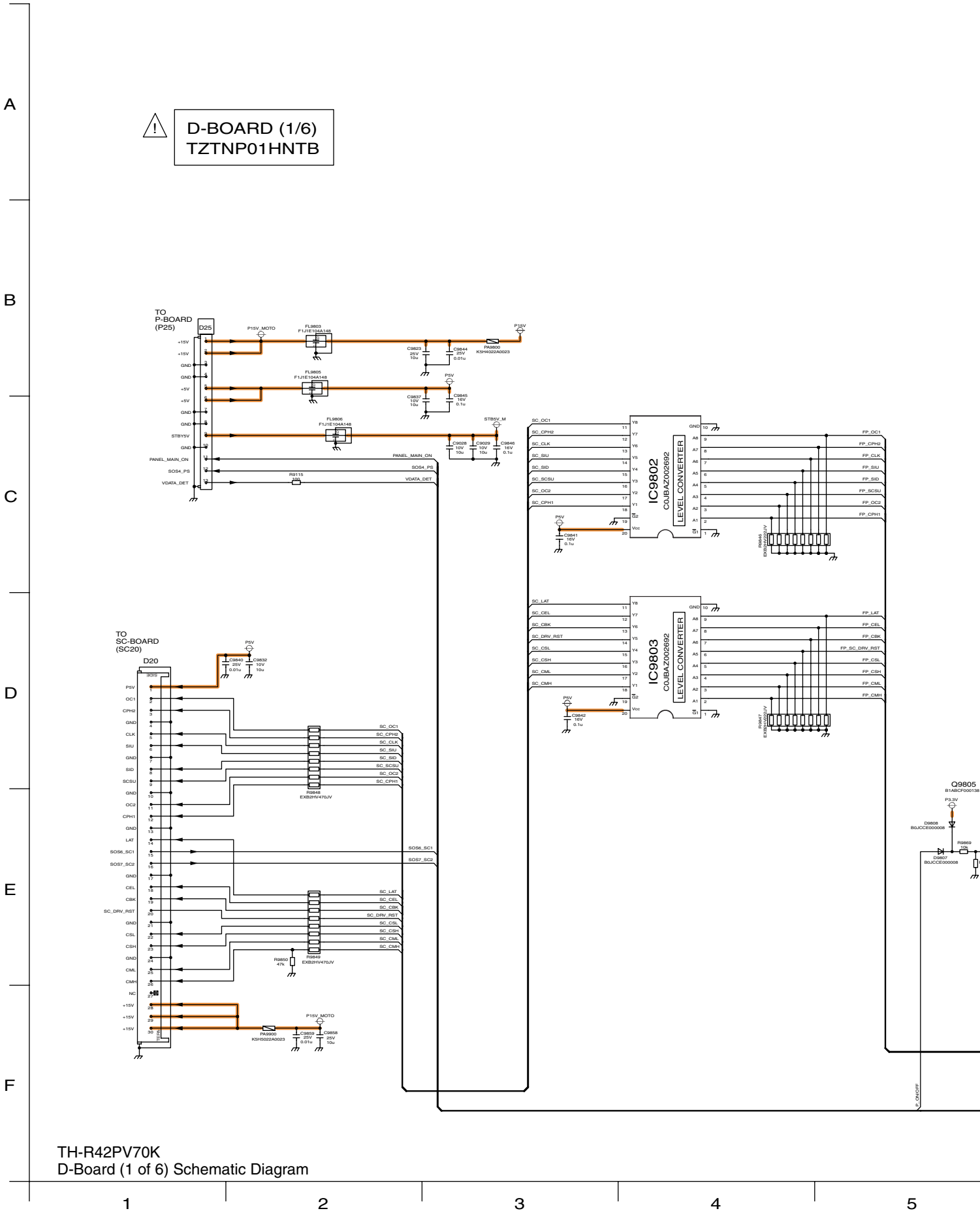

TH-R42PV70K
D-Board (1 of 6) Schematic Diagram

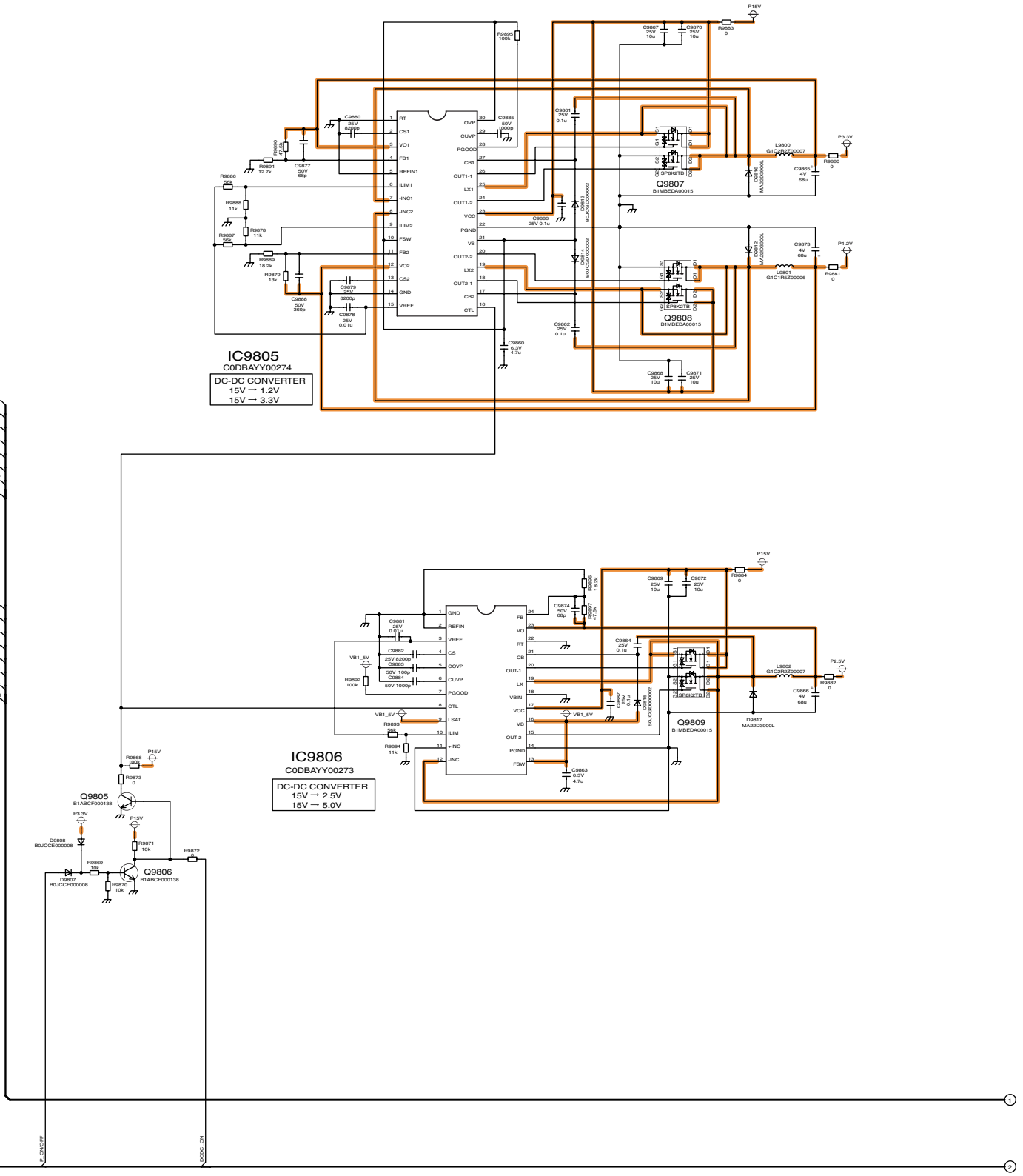

TH-R42PV70K
D-Board (1 of 6) Schematic Diagram

5 6 7 8 9

5.31. D-Board (2 of 6) Schematic Diagram

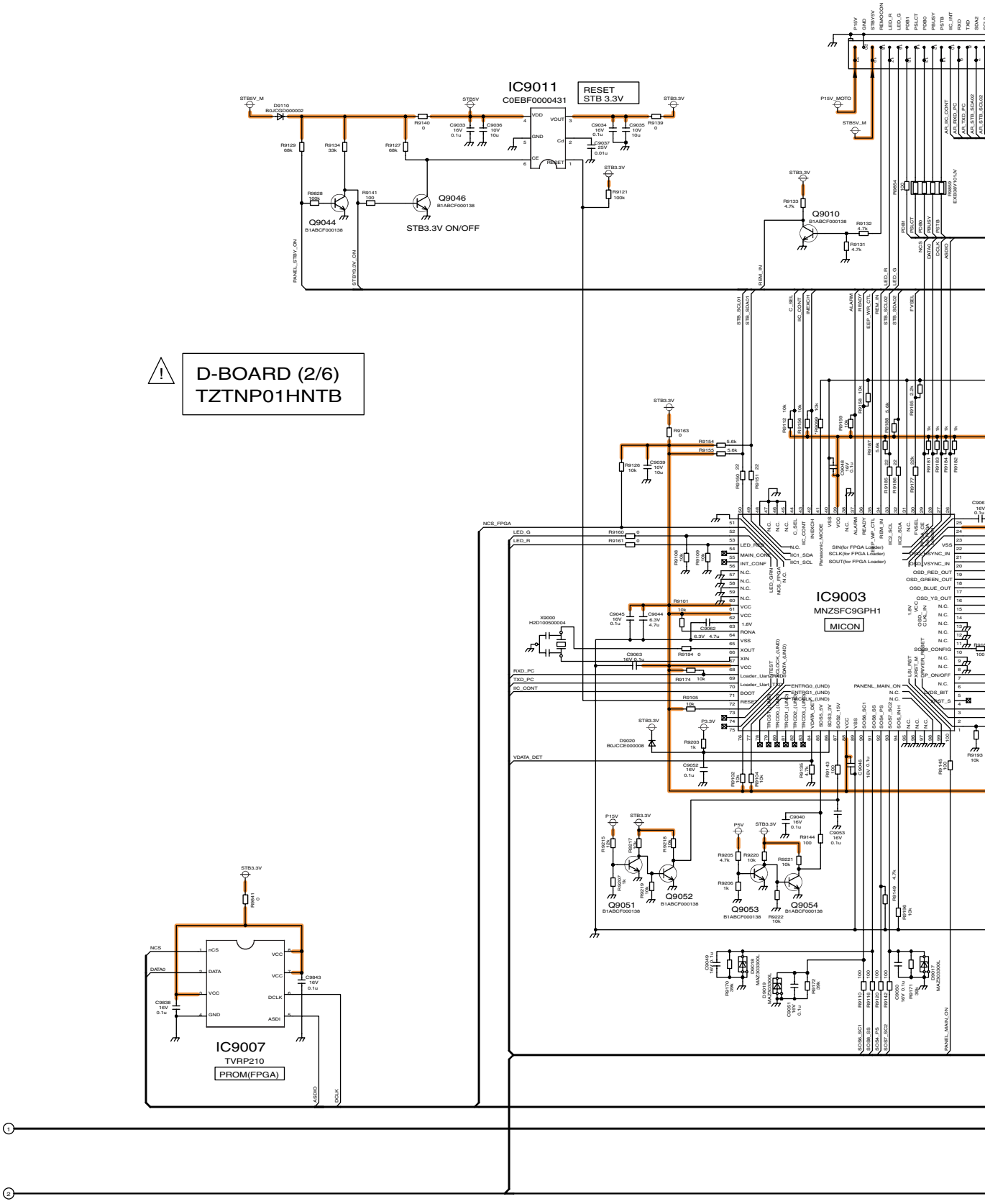

TH-R42PV70K
D-Board (2 of 6) Schematic Diagram

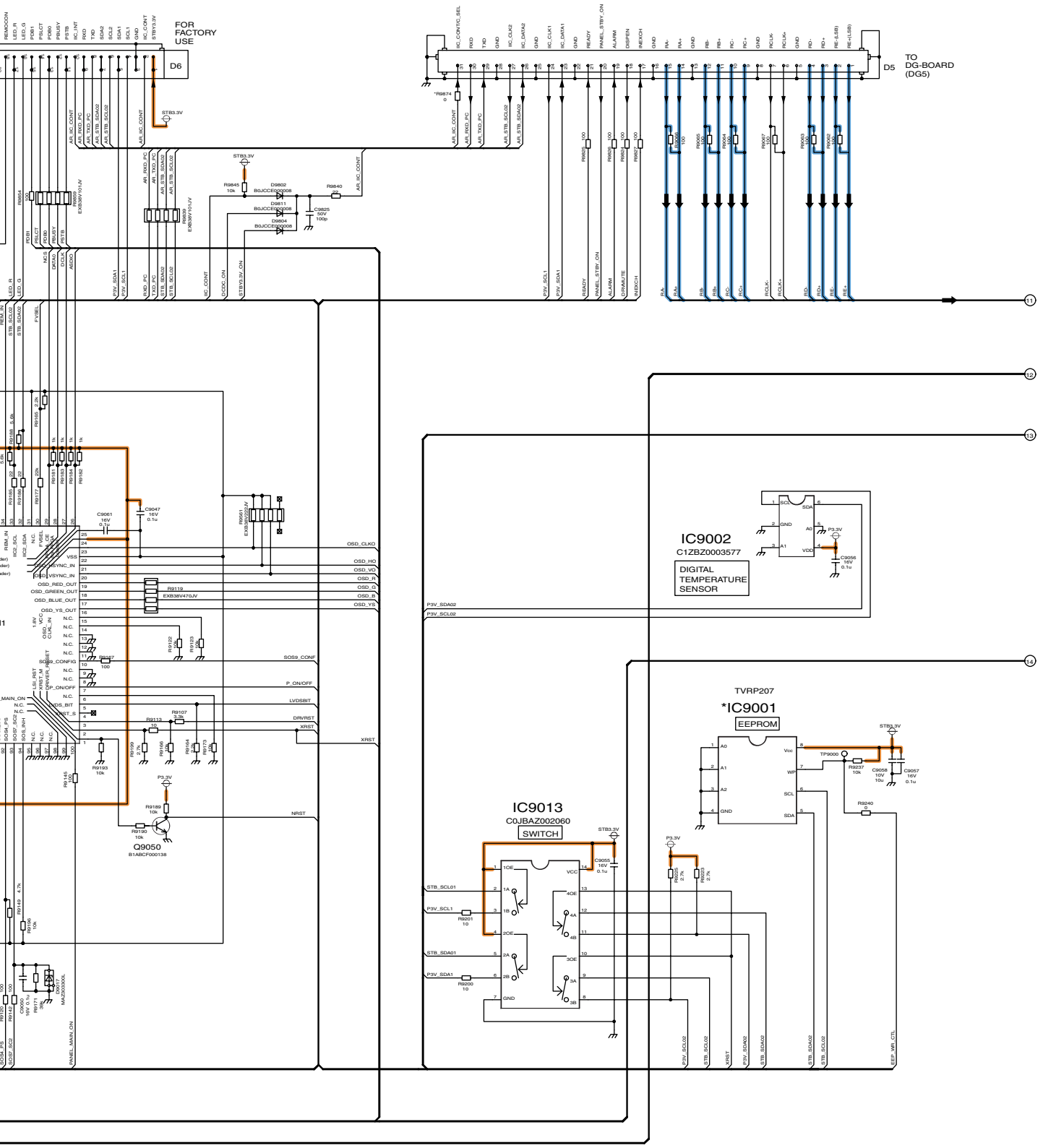

TH-R42PV70K
D-Board (2 of 6) Schematic Diagram

14 15 16 17 18

5.32. D-Board (3 of 6) Schematic Diagram

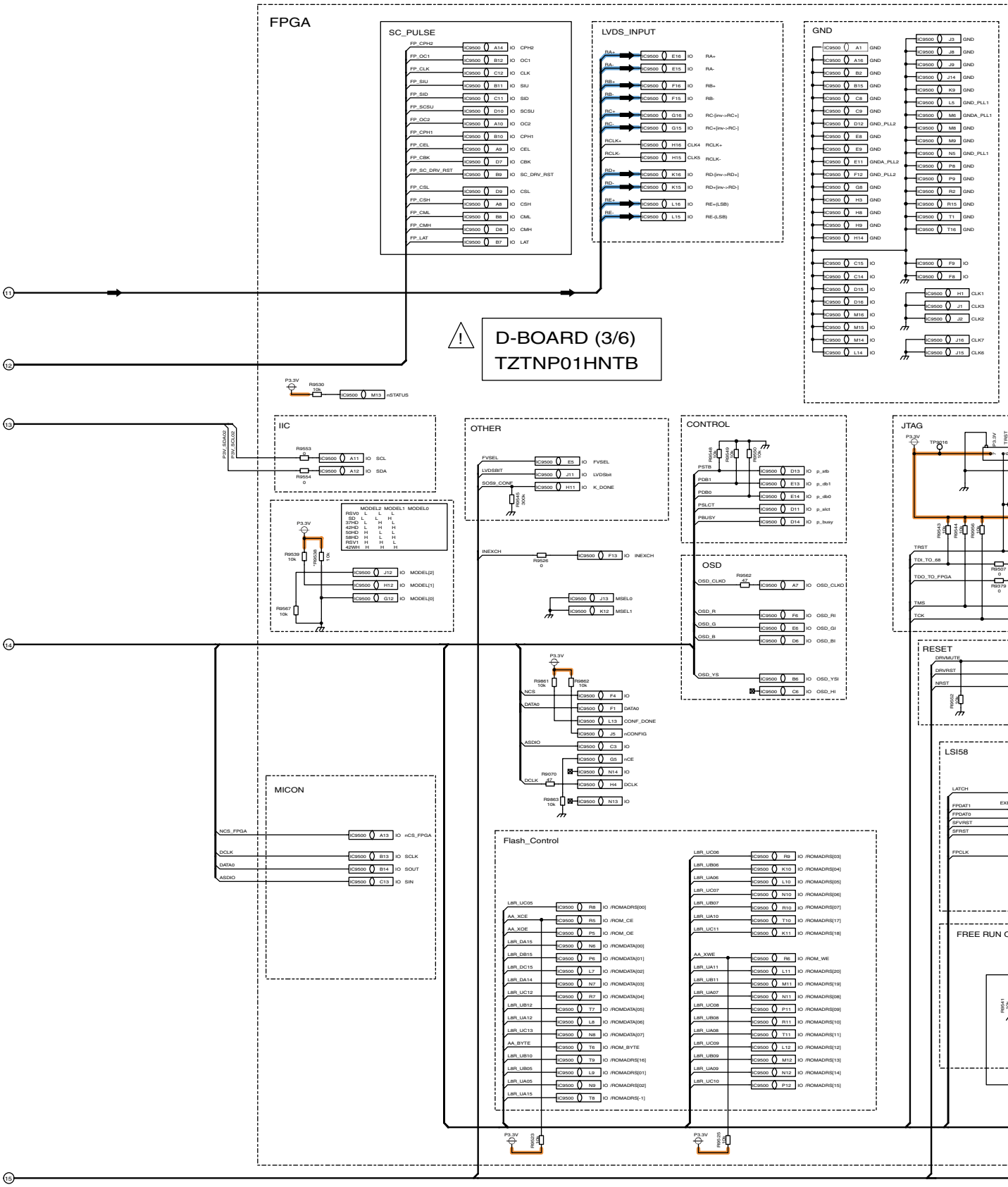

TH-R42PV70K
D-Board (3 of 6) Schematic Diagram

19 20 21 22 23

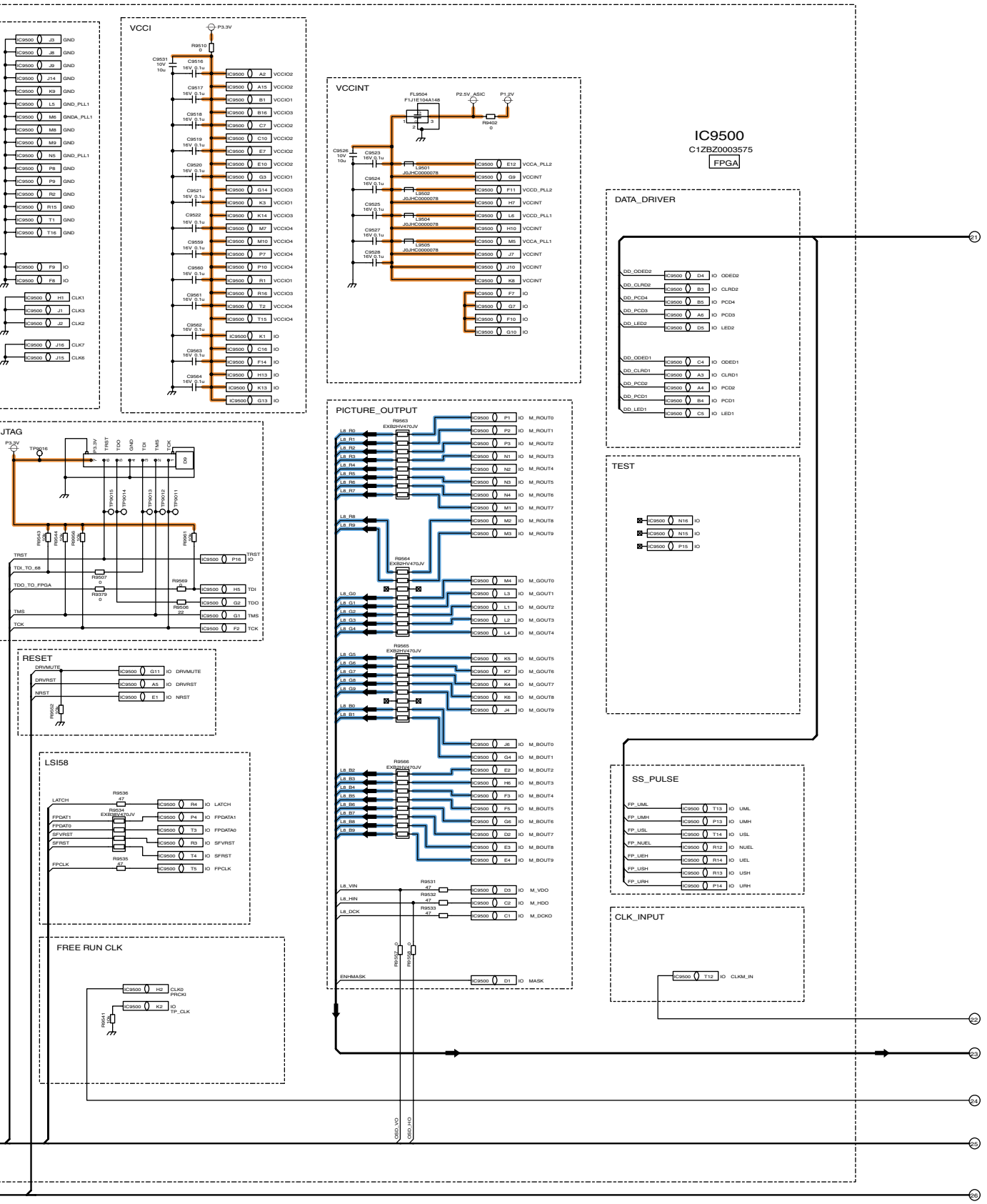

TH-R42PV70K
D-Board (3 of 6) Schematic Diagram

23 24 25 26 27

5.33. D-Board (4 of 6) Schematic Diagram

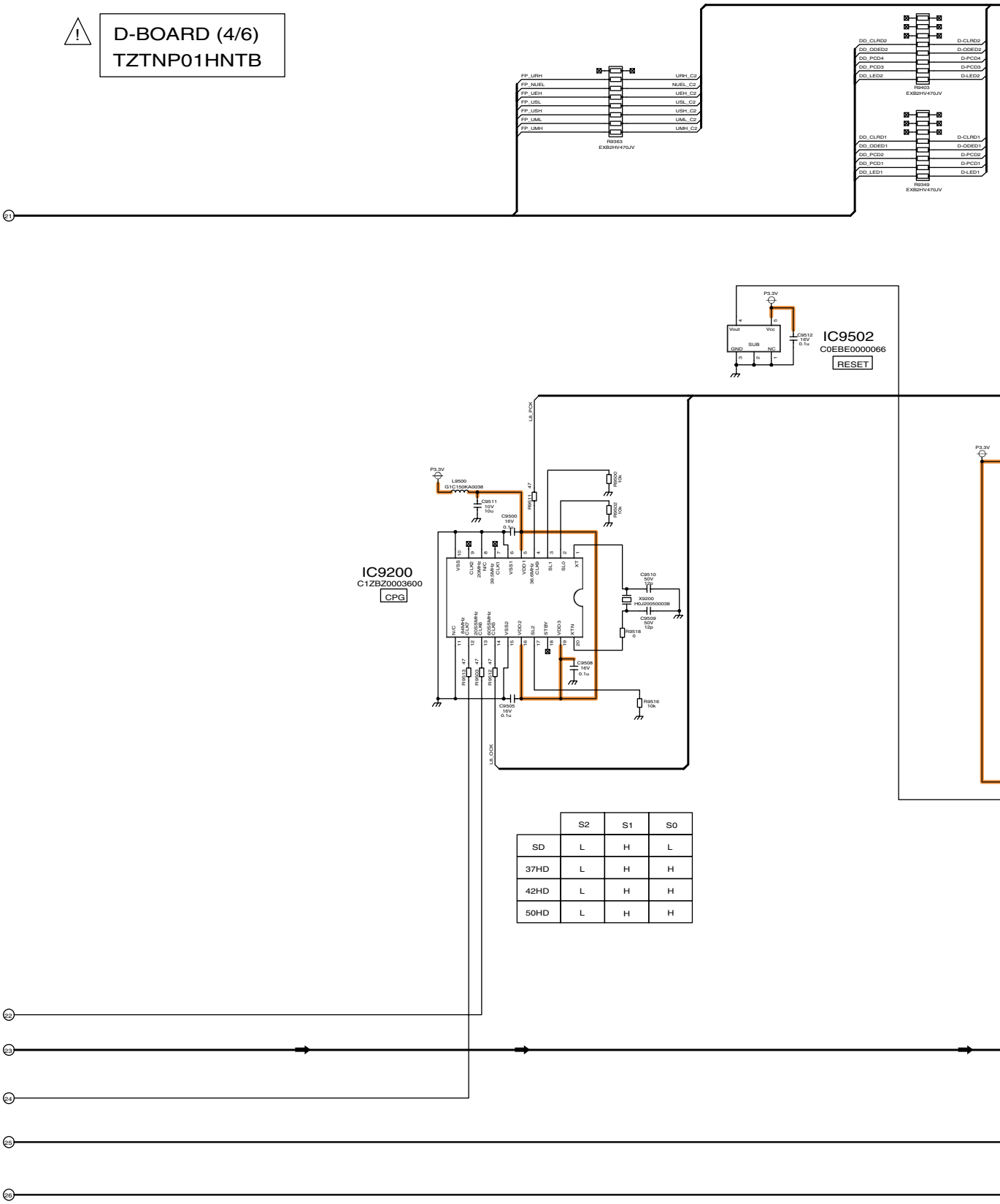

	S2	S1	S0
SD	L	H	L
37HD	L	H	H
42HD	L	H	H
50HD	L	H	H

TH-R42PV70K
D-Board (4 of 6) Schematic Diagram

28 29 30 31 32

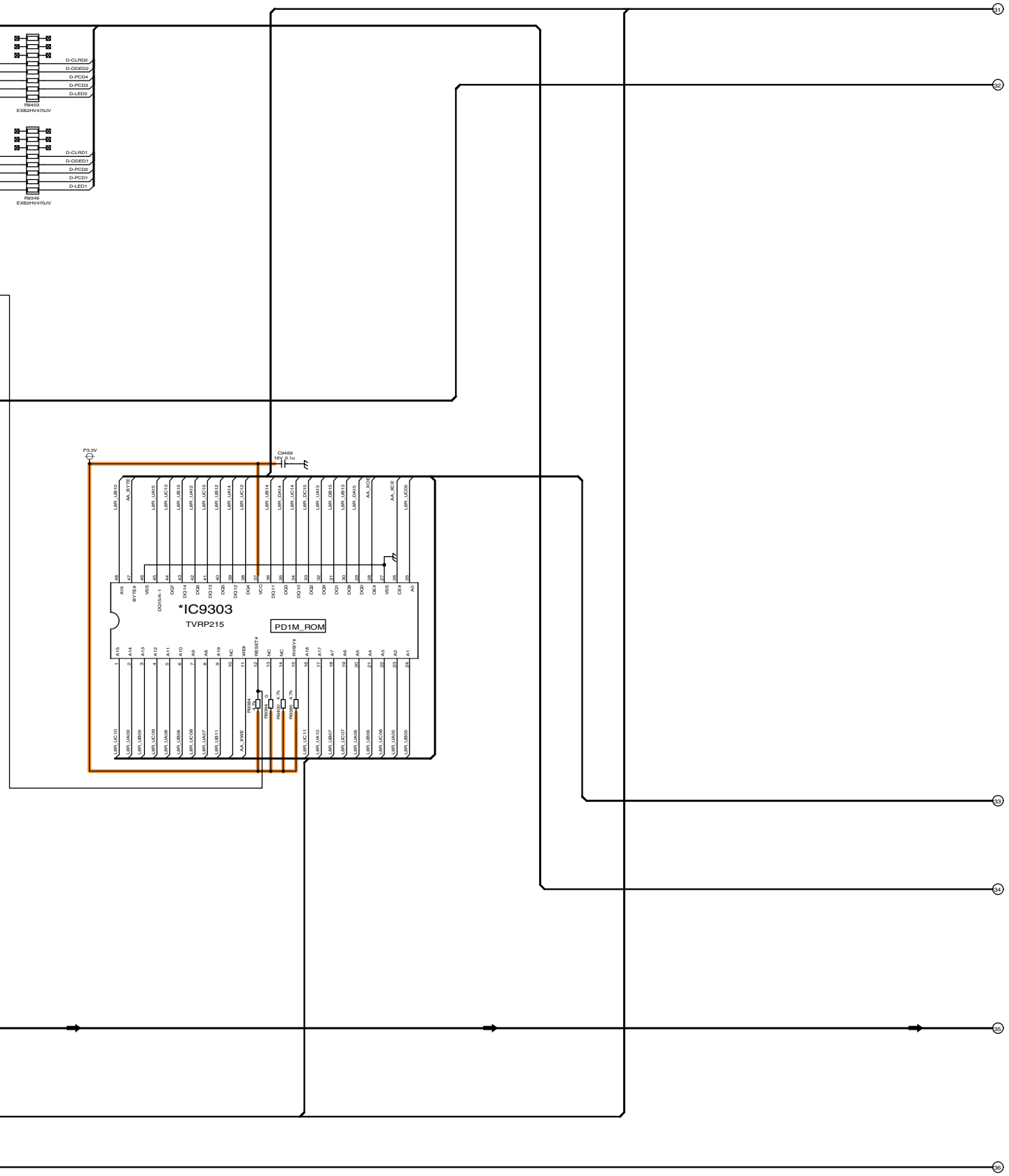

TH-R42PV70K
D-Board (4 of 6) Schematic Diagram

32 33 34 35 36

5.34. D-Board (5 of 6) Schematic Diagram

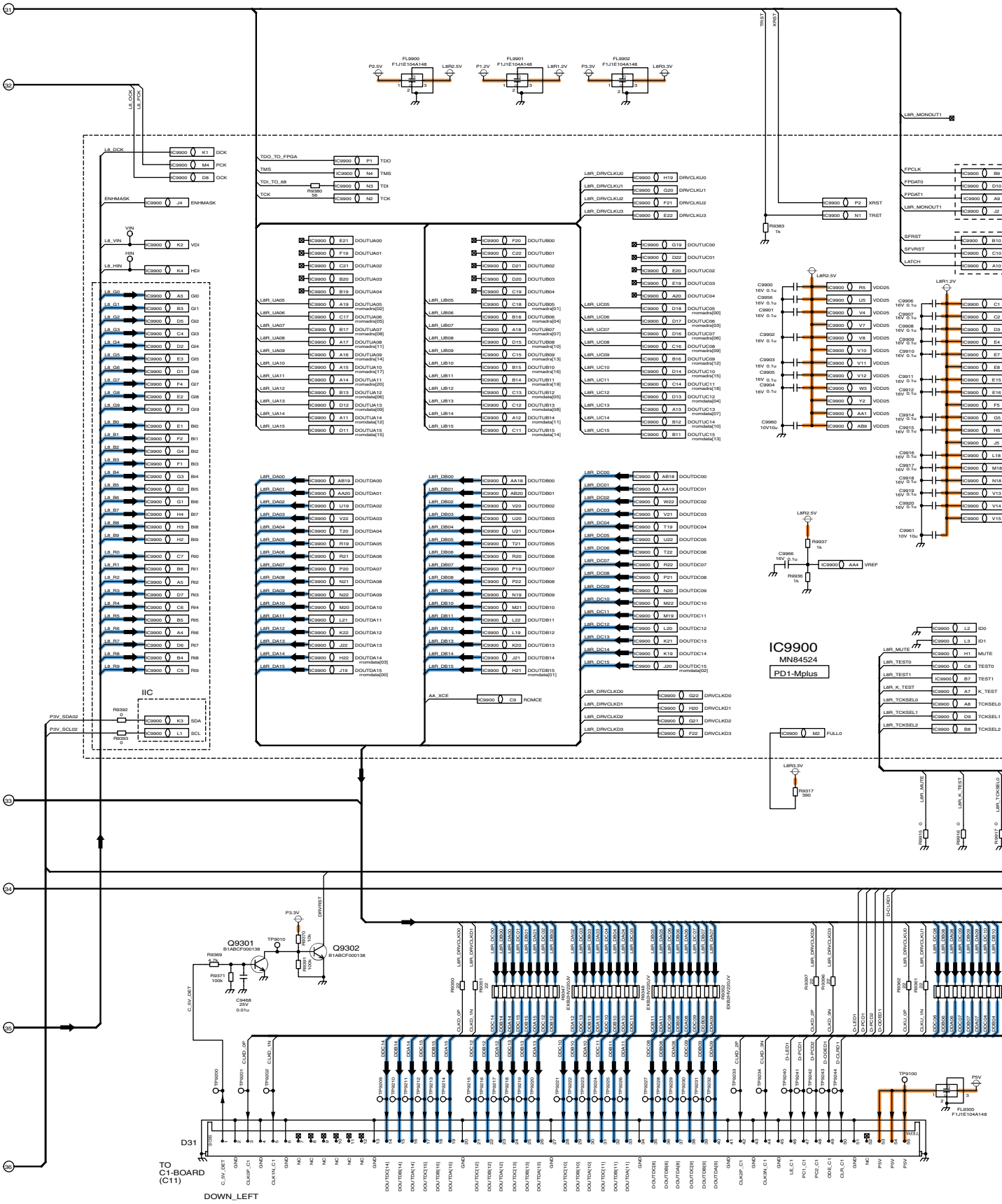

TH-R42PV70K
D-Board (5 of 6) Schematic Diagram

37 38 39 40 41

D-BOARD (5/6)
TZTNP01HNTB

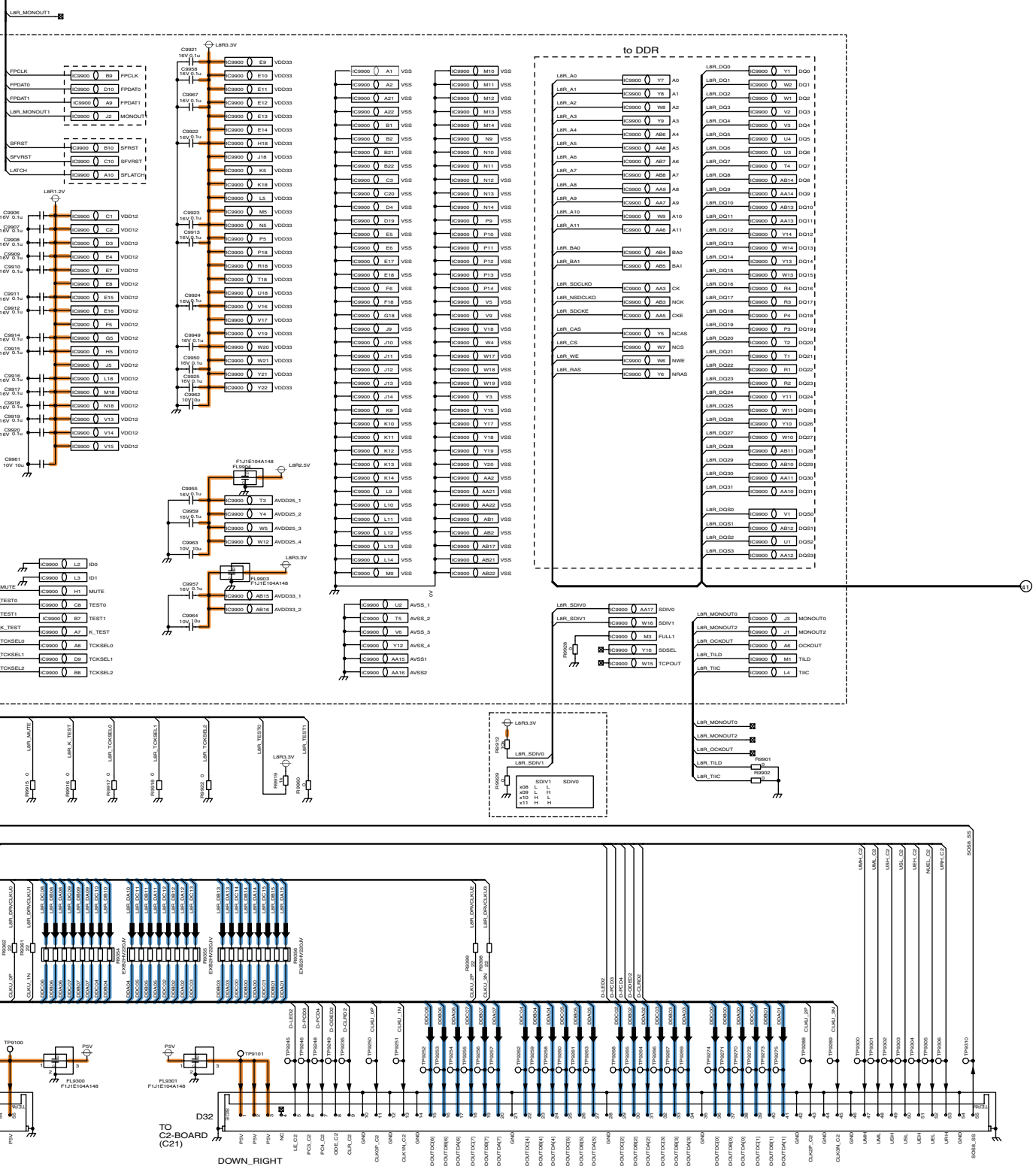

TH-R42PV70K
D-Board (5 of 6) Schematic Diagram

41 42 43 44 45

5.35. D-Board (6 of 6) Schematic Diagram

D-BOARD (6/6)
TZTNP01HNTB

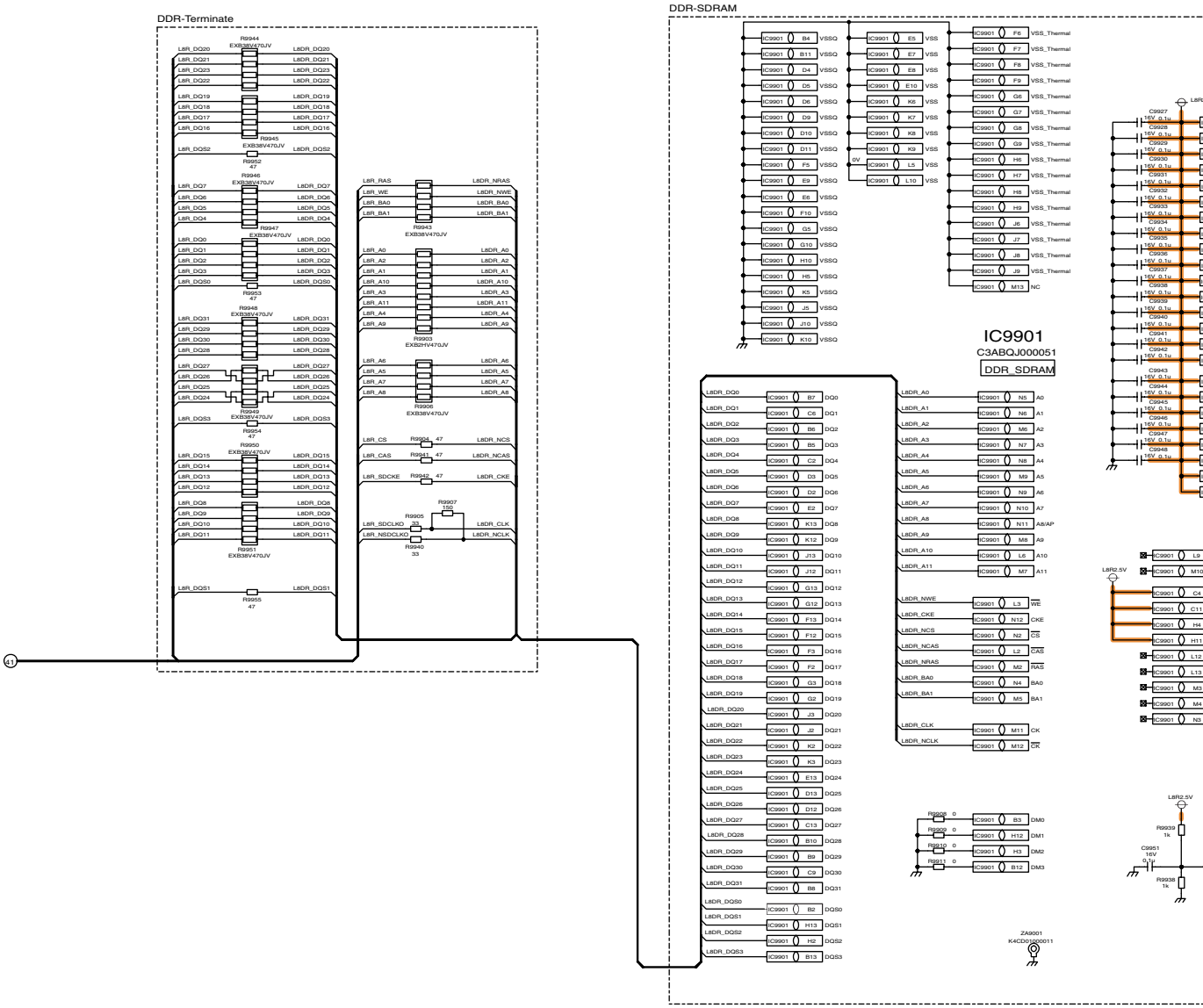

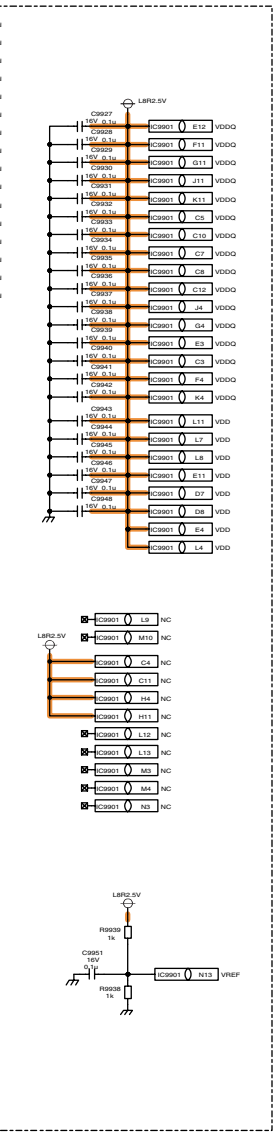

TH-R42PV70K
D-Board (6 of 6) Schematic Diagram

50 | 51 | 52 | 53 | 54

5.36. C1 and C2 Block Diagram

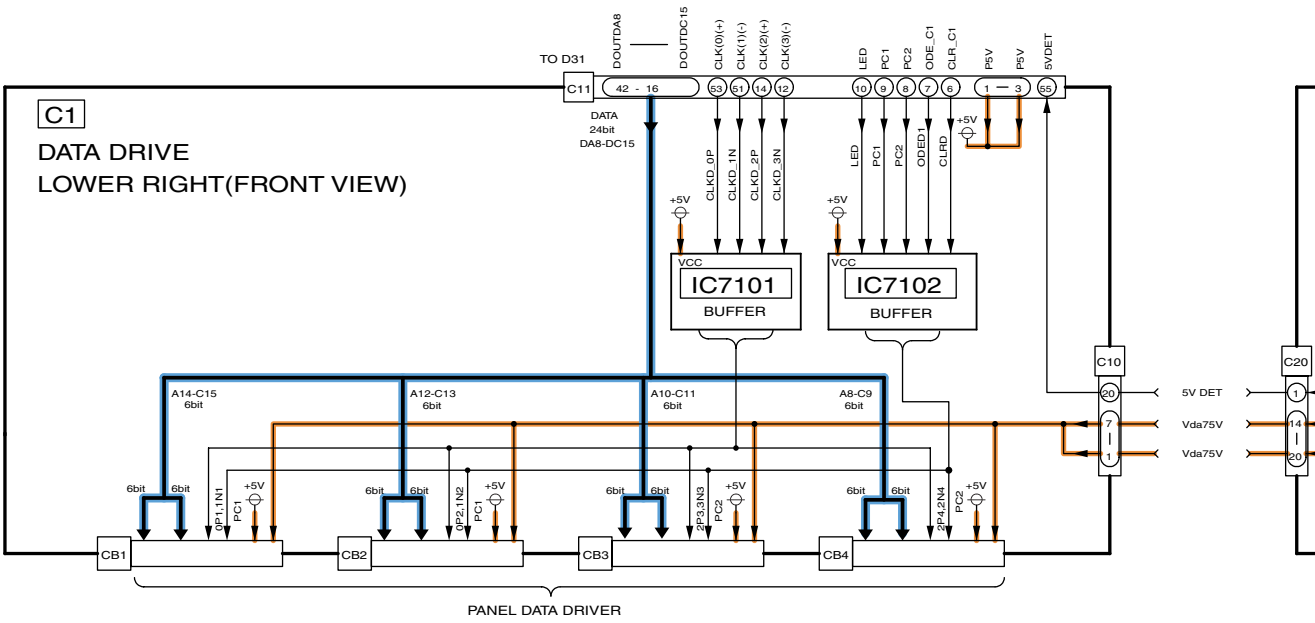

TH-R42PV70K
C1 and C2-Board Block Diagram

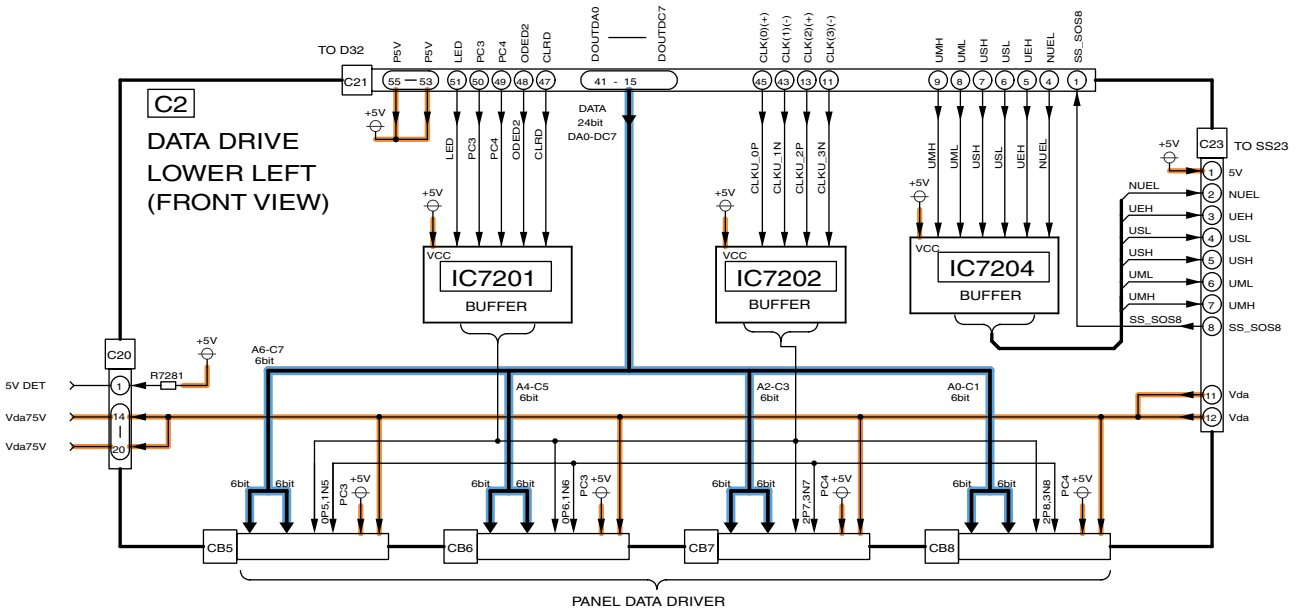

TH-R42PV70K
C1 and C2-Board Block Diagram

5.37. C1-Board (1 of 2) Schematic Diagram

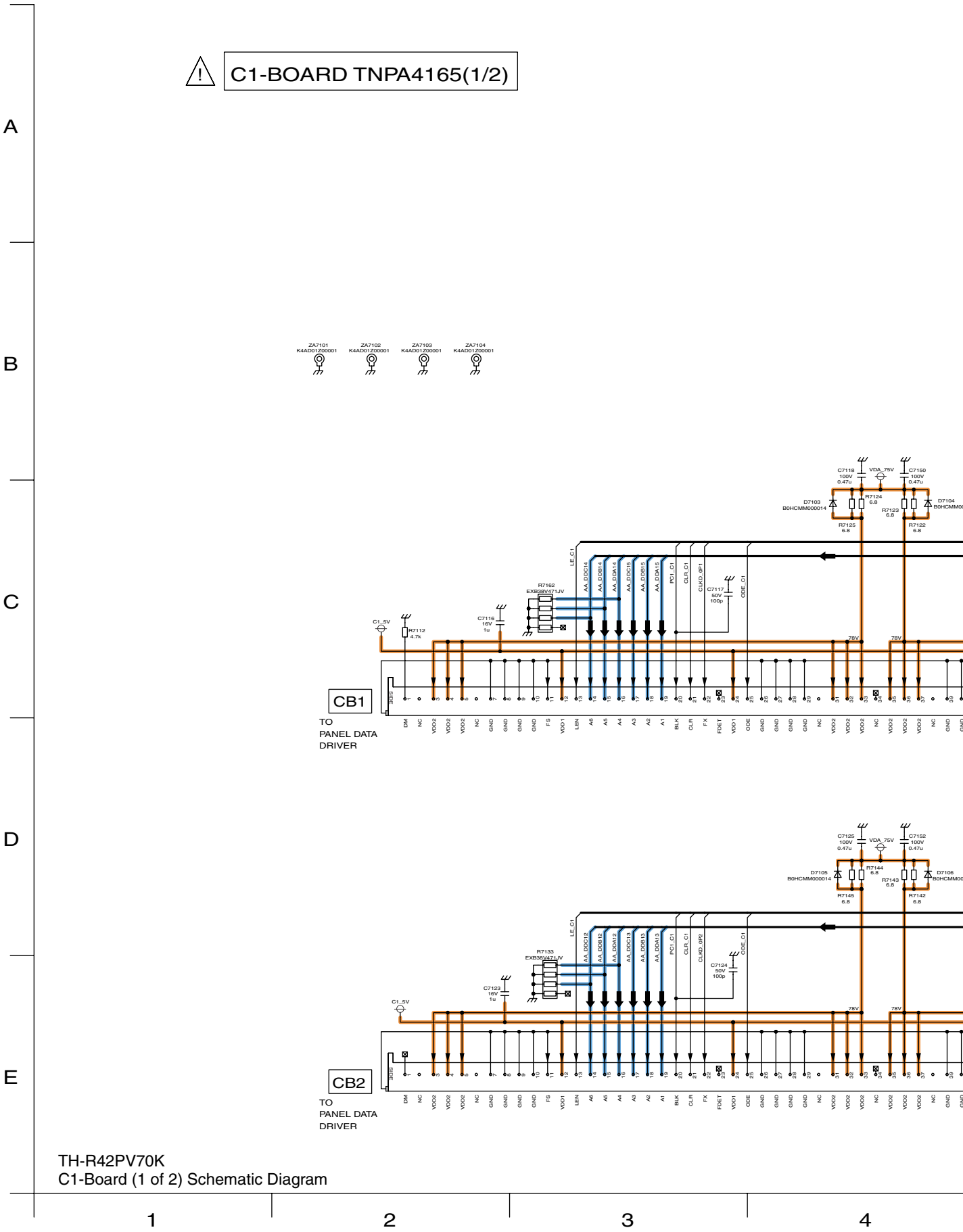

TH-R42PV70K
C1-Board (1 of 2) Schematic Diagram

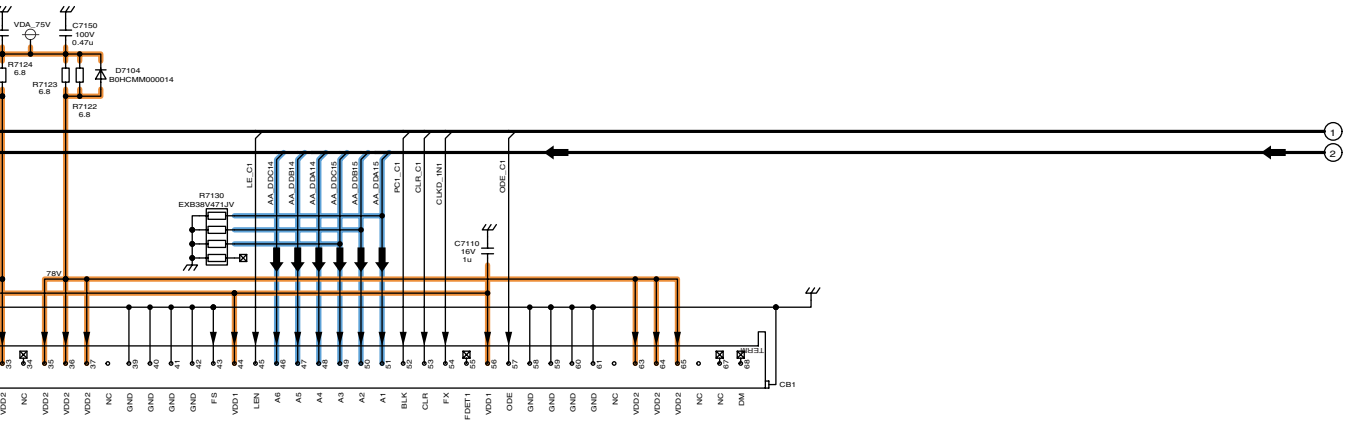

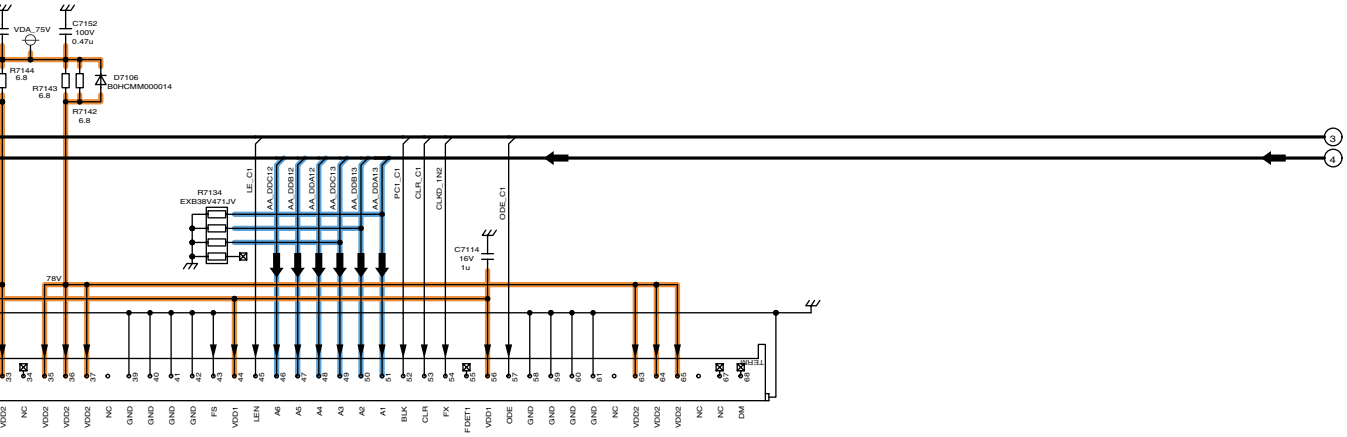

TH-R42PV70K
C1-Board (1 of 2) Schematic Diagram

4 5 6 7 8

5.38. C1-Board (2 of 2) Schematic Diagram

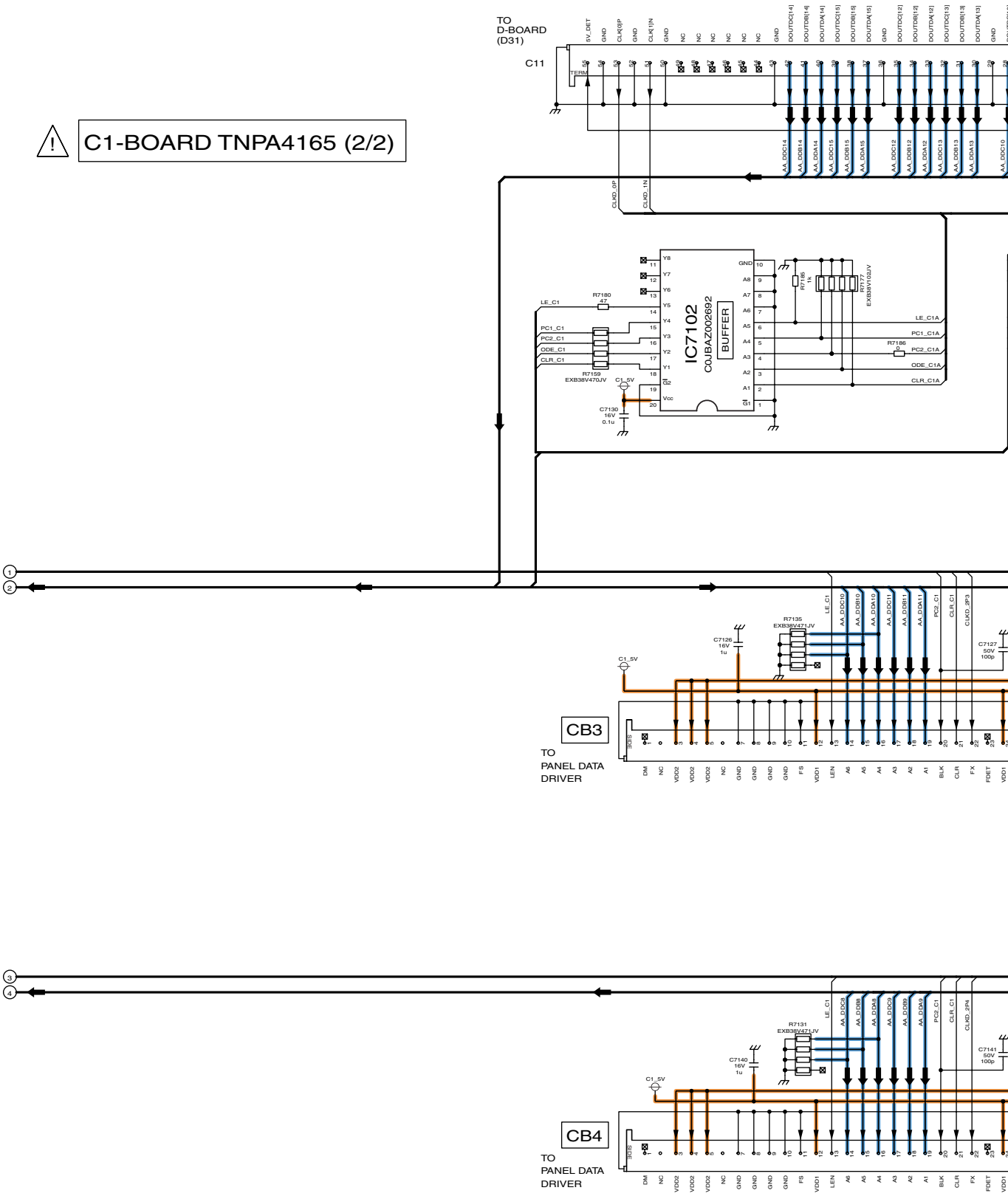

TH-R42PV70K
C1-Board (2 of 2) Schematic Diagram

8 | 9 | 10 | 11 | 12

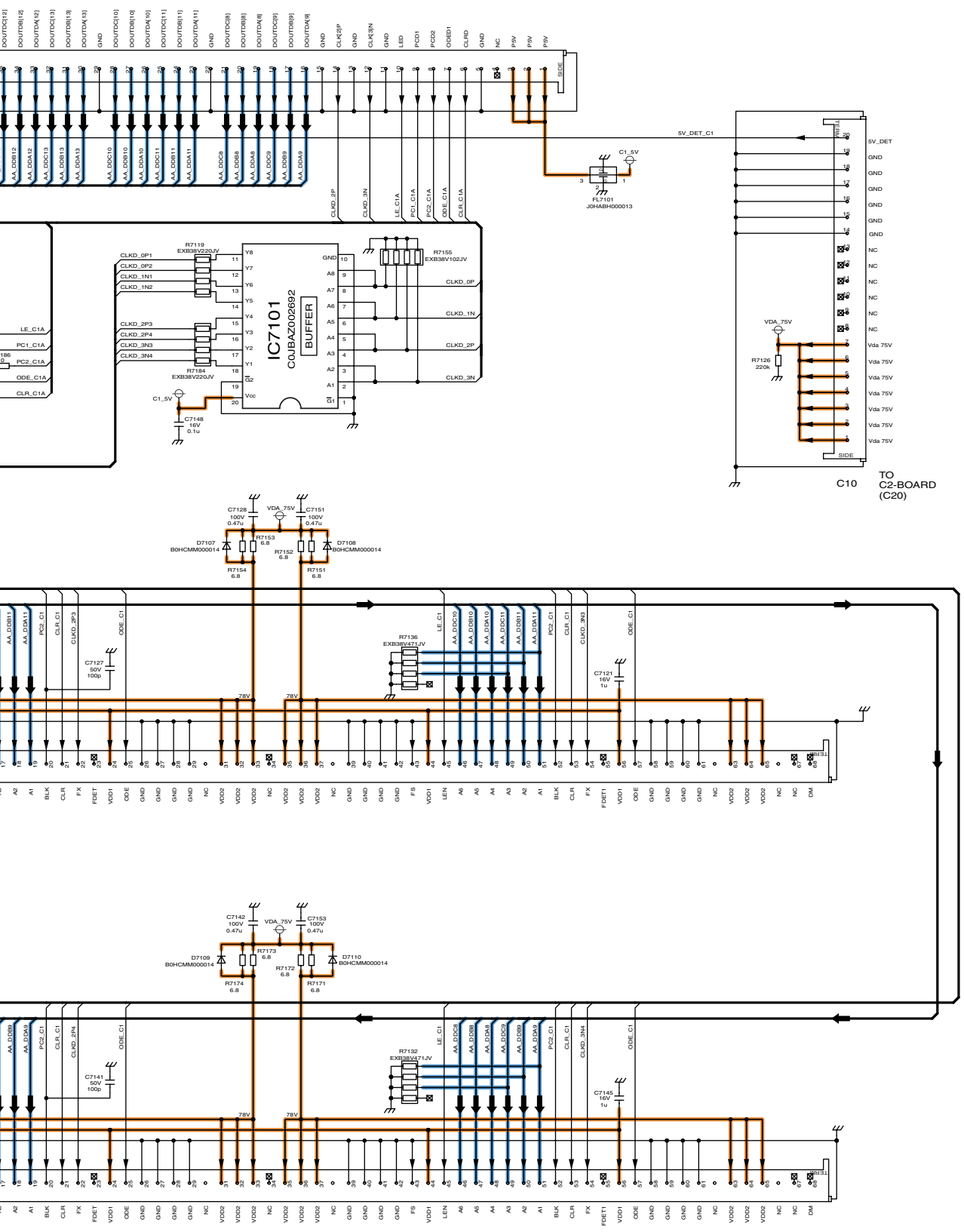

TH-R42PV70K
C1-Board (2 of 2) Schematic Diagram

12 13 14 15

5.39. C2-Board (1 of 2) Schematic Diagram

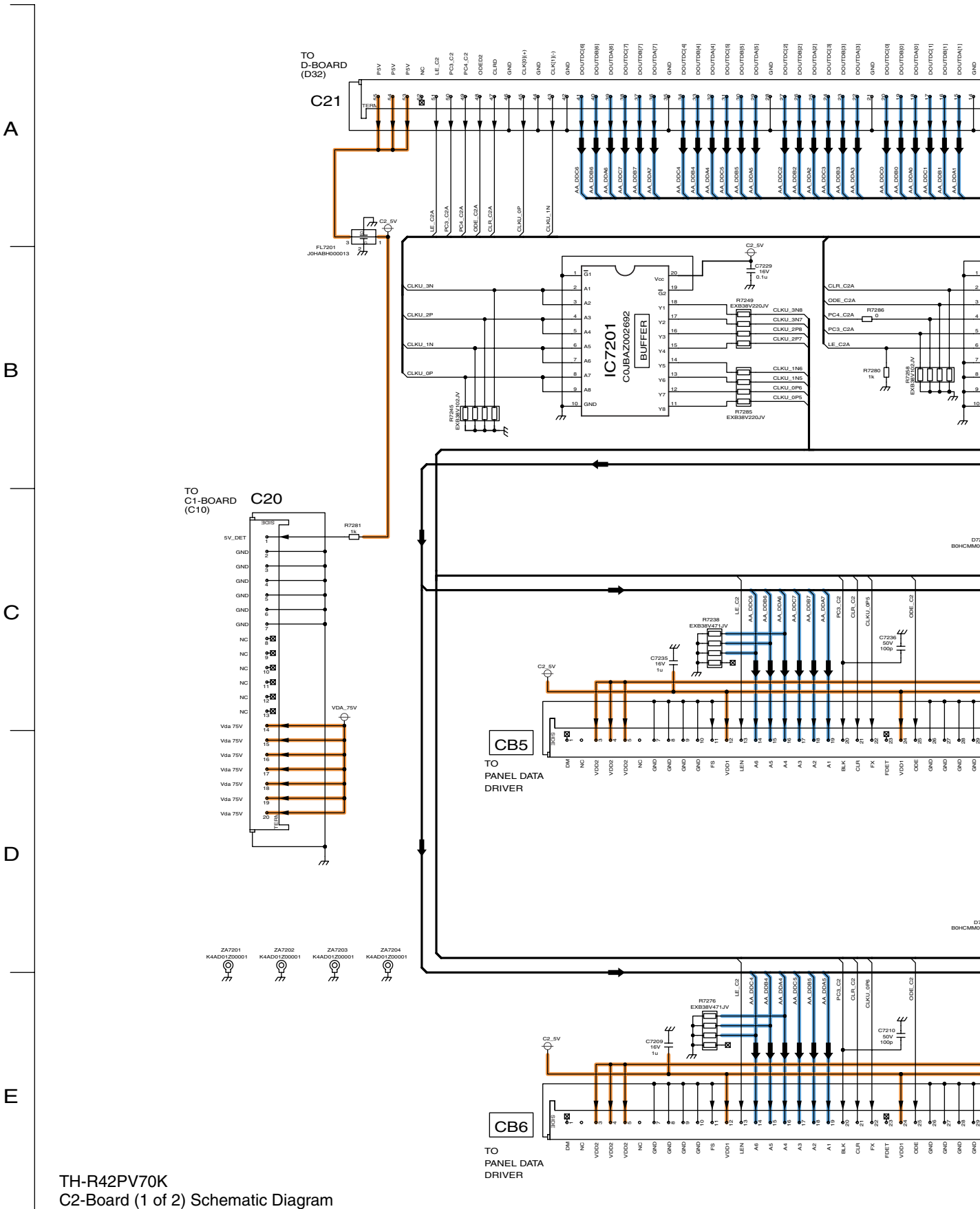

TH-R42PV70K
C2-Board (1 of 2) Schematic Diagram

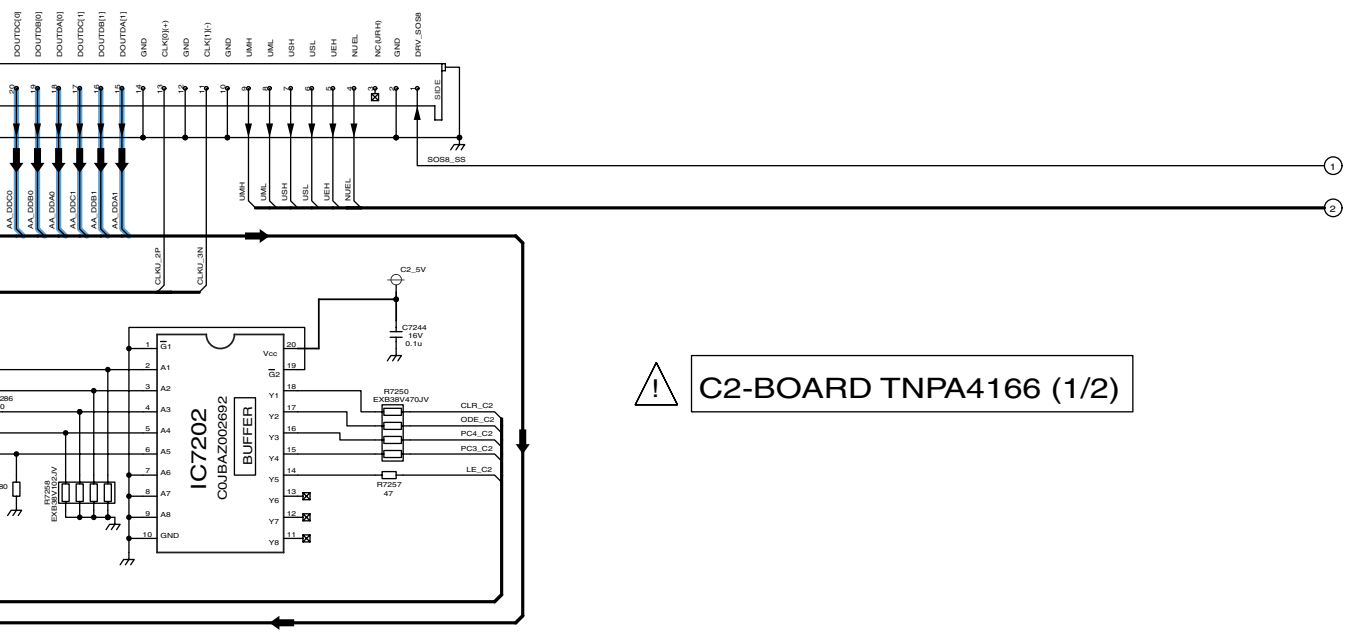

C2-BOARD TNPA4166 (1/2)

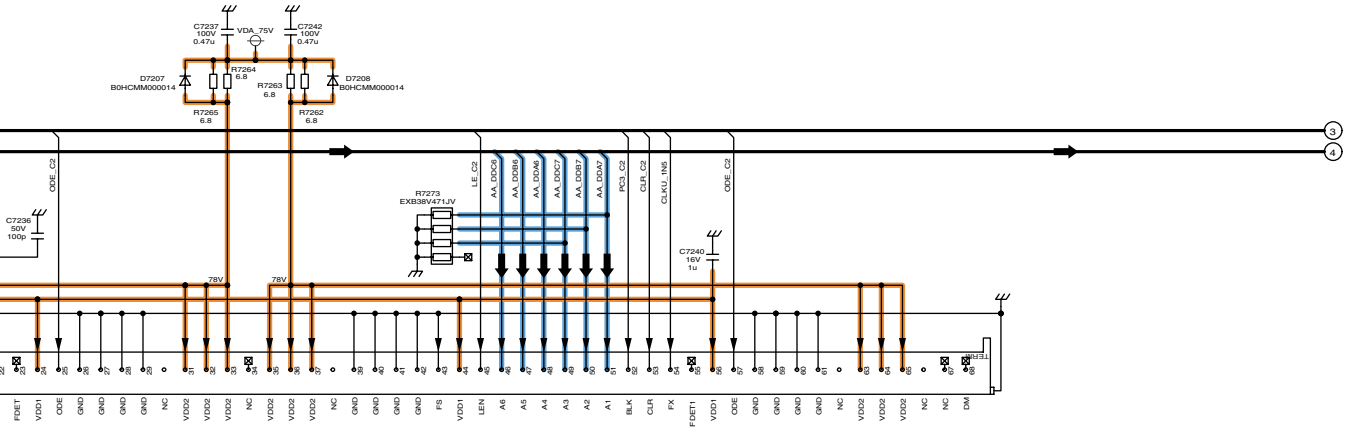

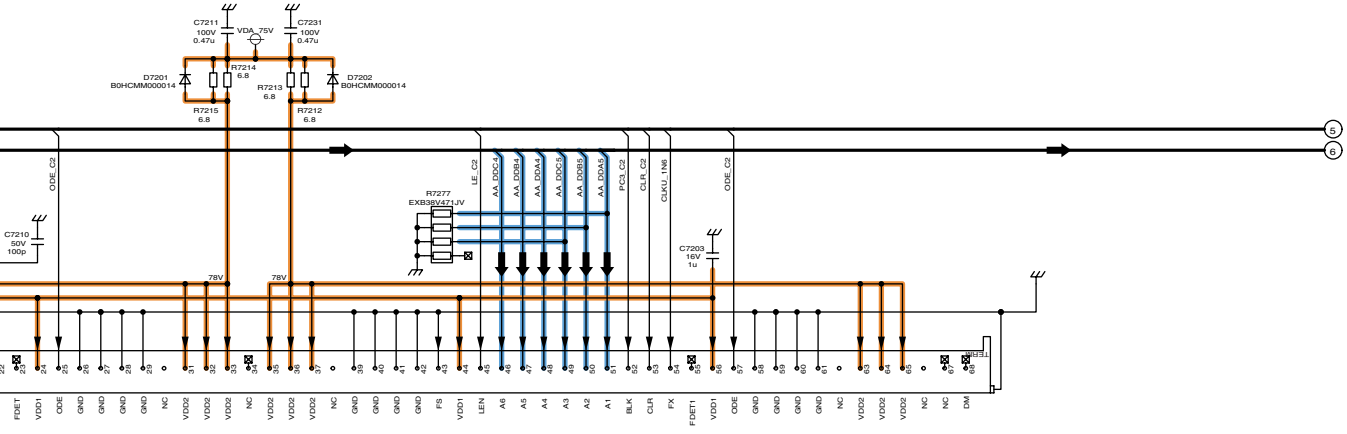

TH-R42PV70K
C2-Board (1 of 2) Schematic Diagram

4 5 6 7 8

5.40. C2-Board (2 of 2) Schematic Diagram

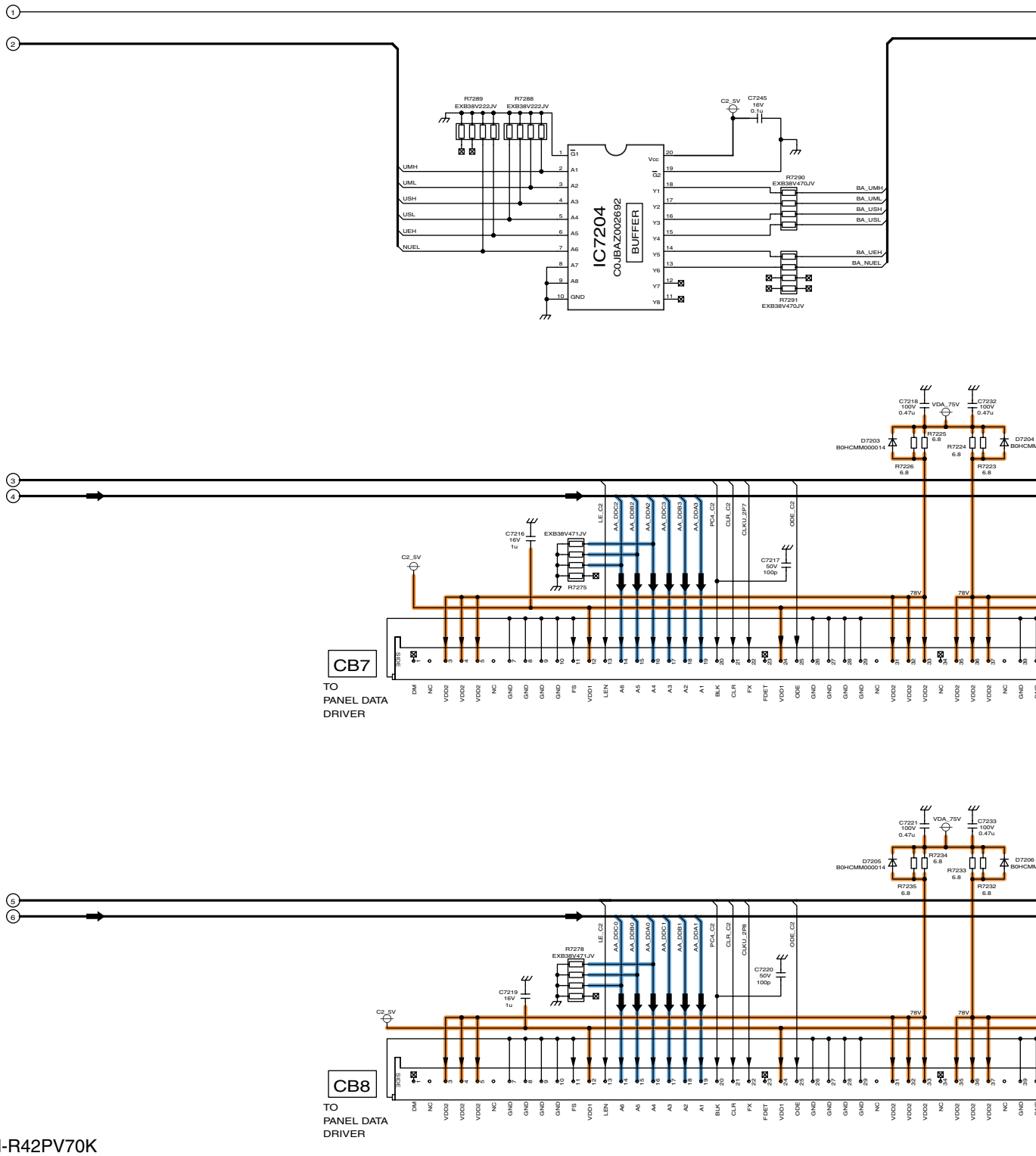

TH-R42PV70K
C2-Board (2 of 2) Schematic Diagram

8 9 10 11 12

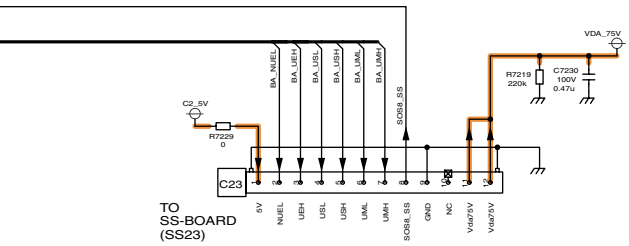

C2-BOARD TNPA4166 (2/2)

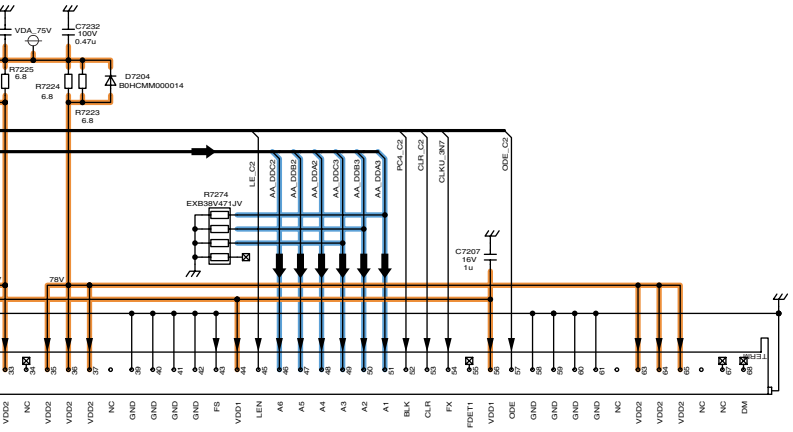

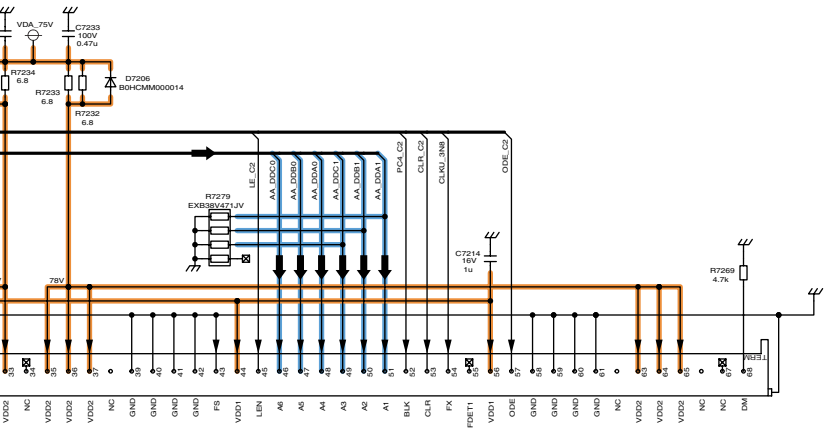

TH-R42PV70K
C2-Board (2 of 2) Schematic Diagram

12 13 14 15

5.41. SC-Board Block Diagram

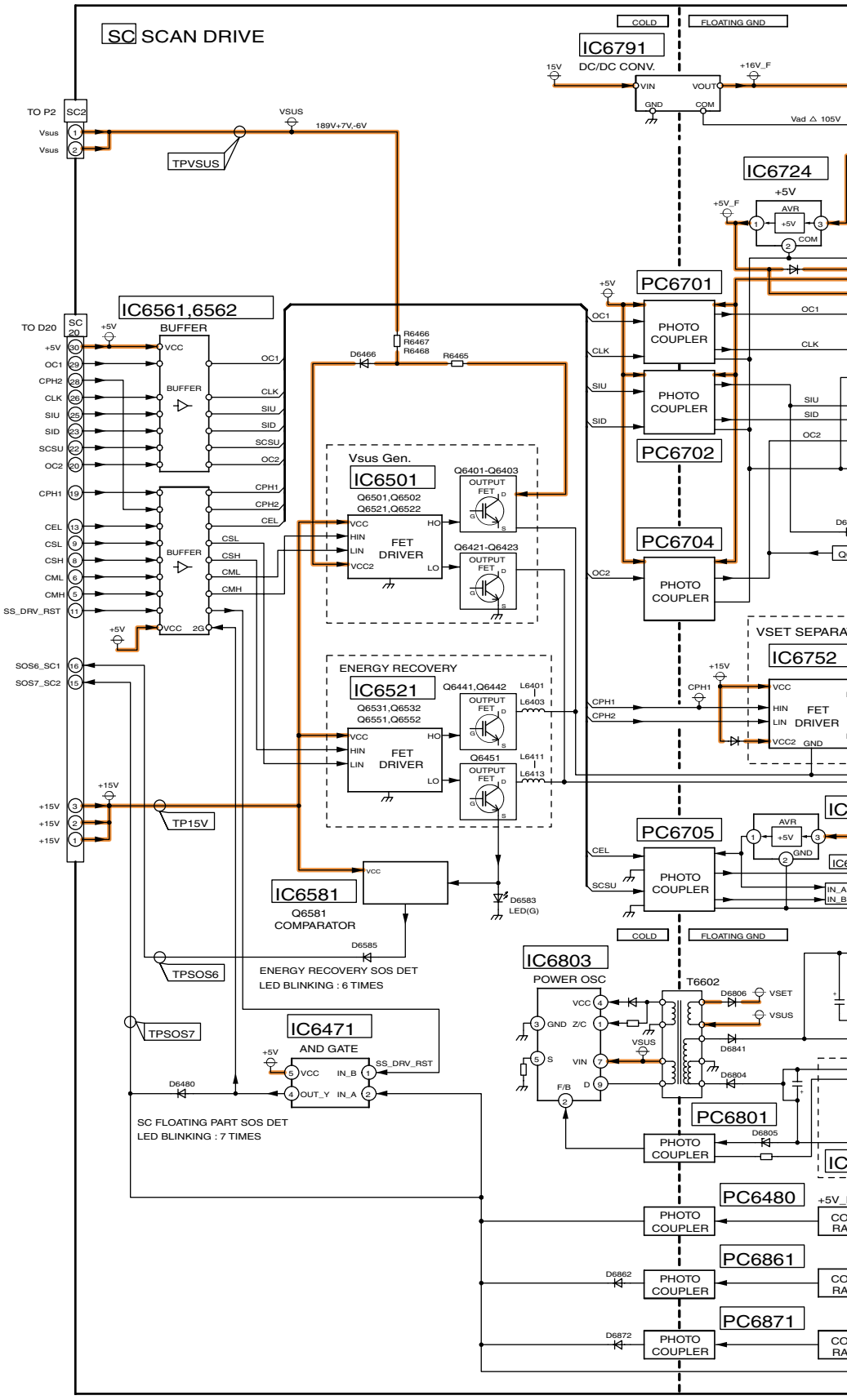

TH-R42PV70K
SC-Board Block Diagram

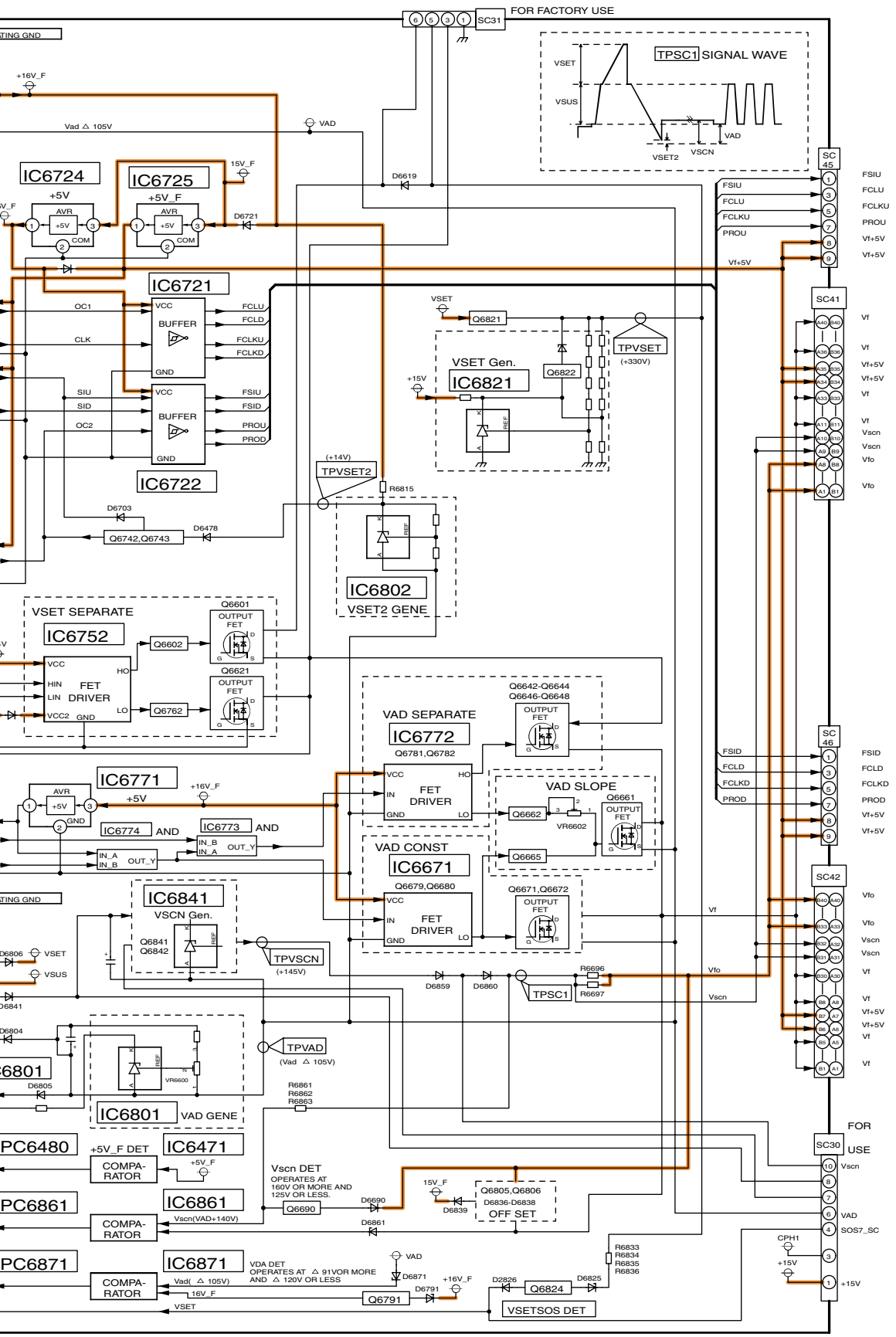

TH-R42PV70K
SC-Board Block Diagram

5.42. SC-Board (1 of 2) Schematic Diagram

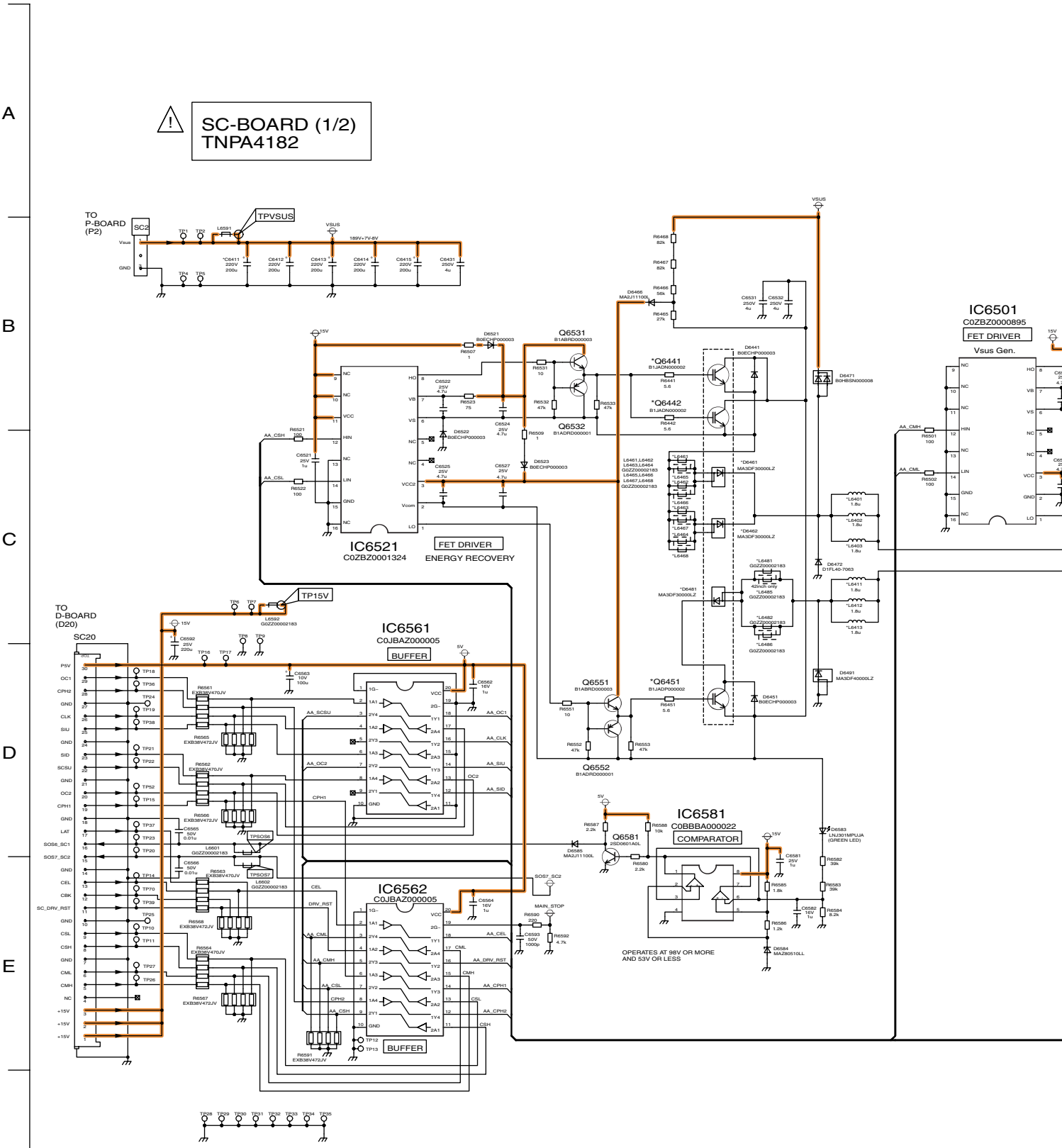

TH-R42PV70K
SC-Board (1 of 2) Schematic Diagram

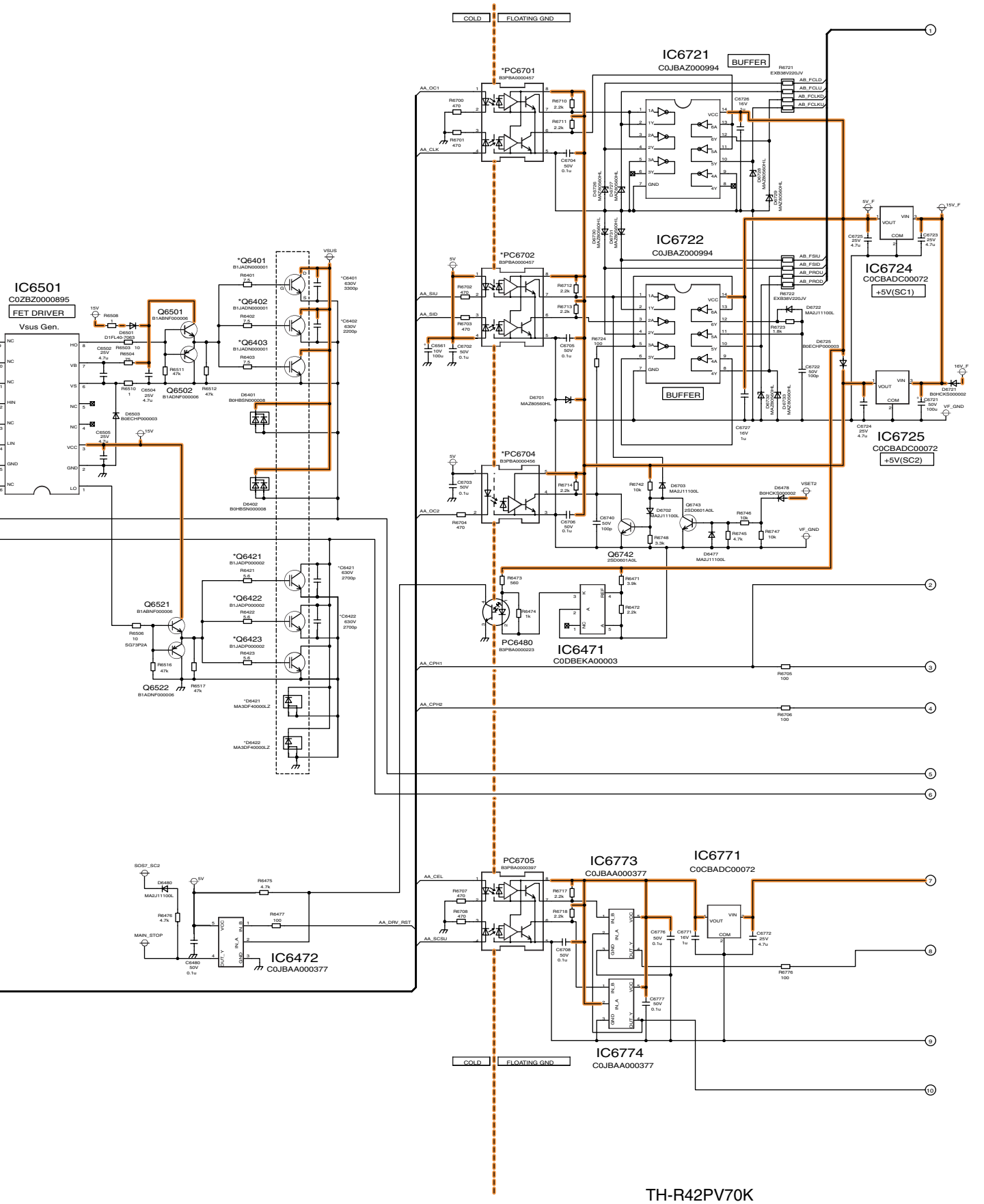

TH-R42PV70K
SC-Board (1 of 2) Schematic Diagram

5 6 7 8 9

5.43. SC-Board (2 of 2) Schematic Diagram

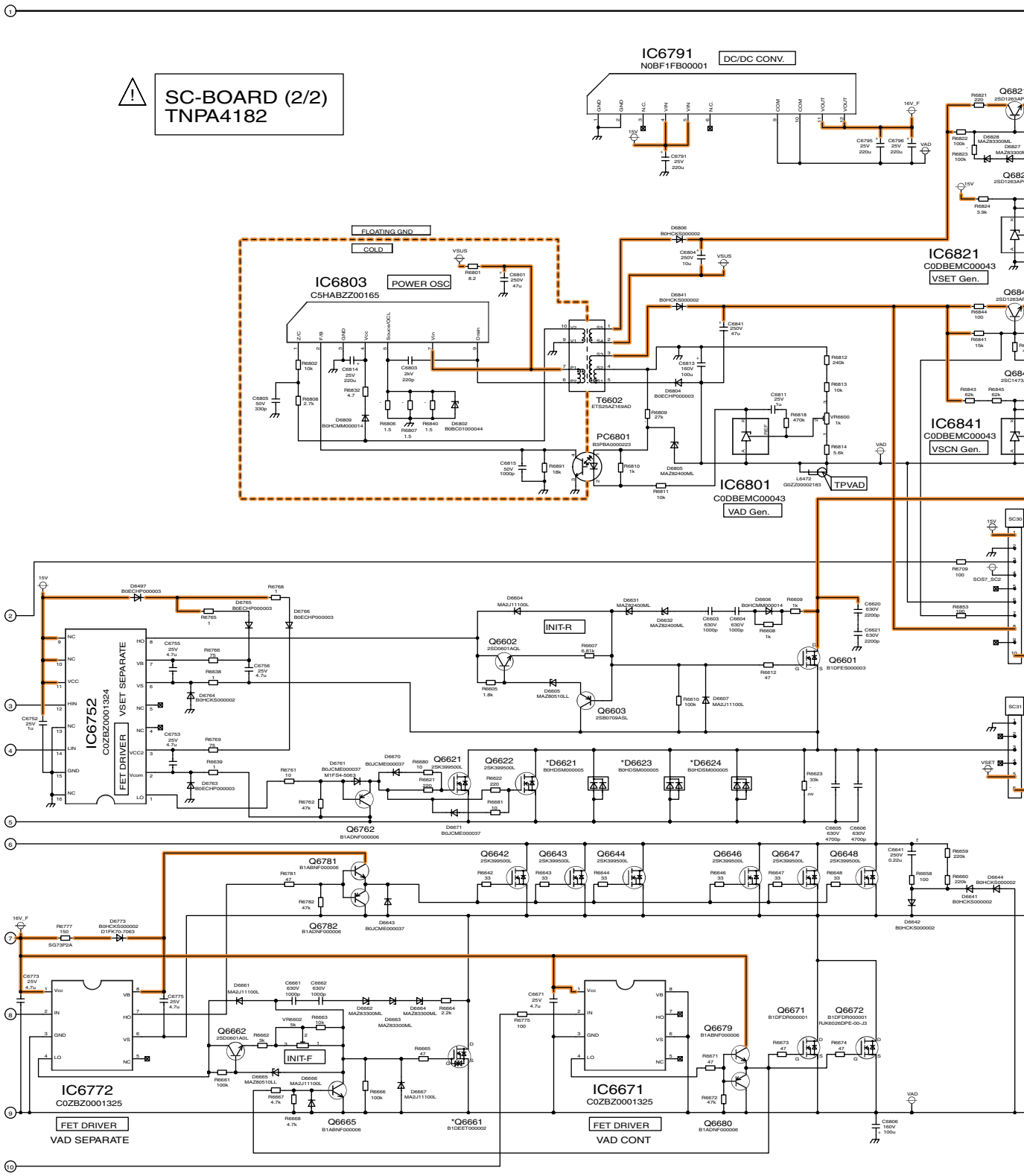

TH-R42PV70K
SC-Board (2 of 2) Schematic Diagram

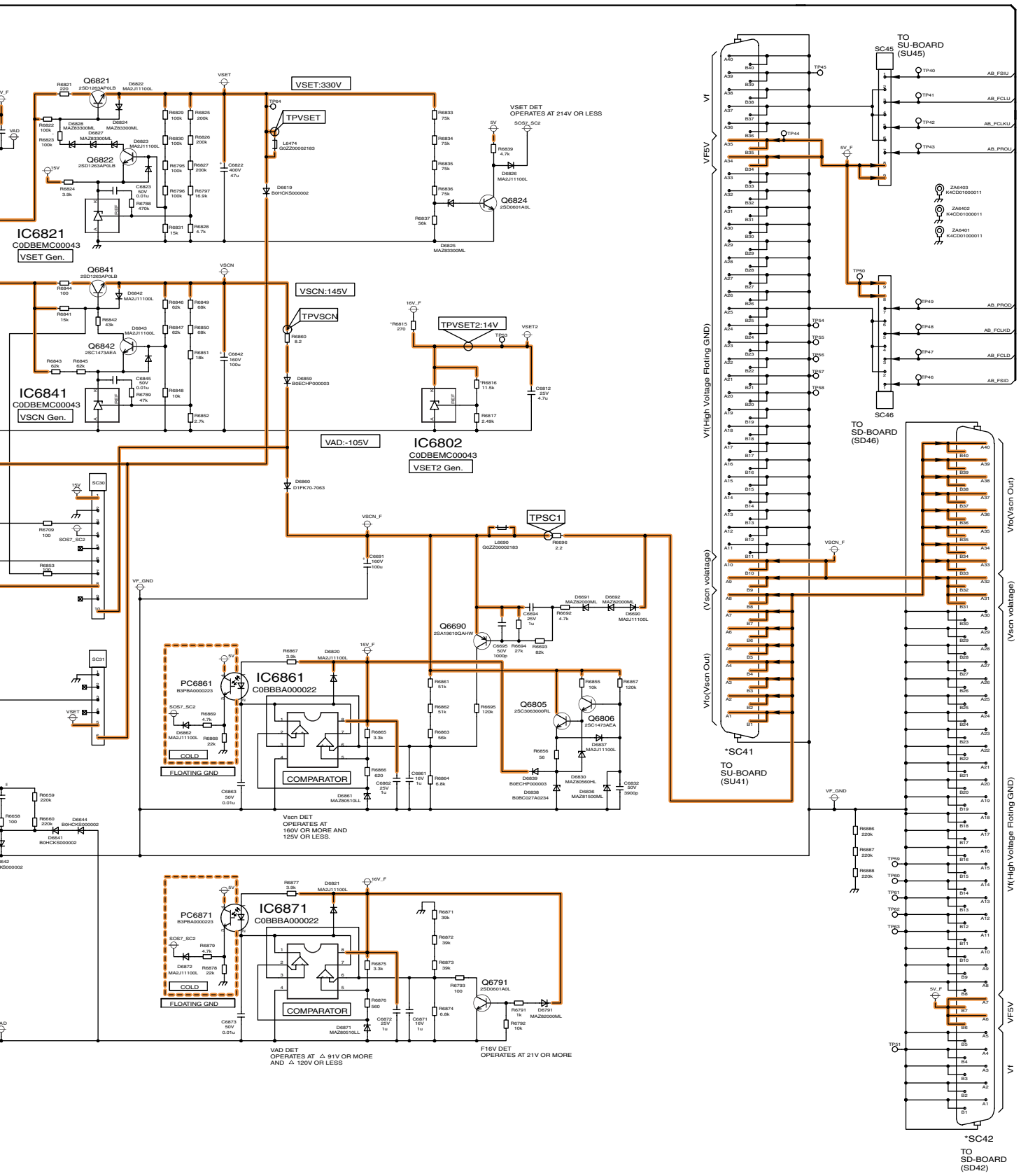

TH-R42PV70K
SC-Board (2 of 2) Schematic Diagram

14 15 16 17 18

5.44. SU and SD-Board Block Diagram

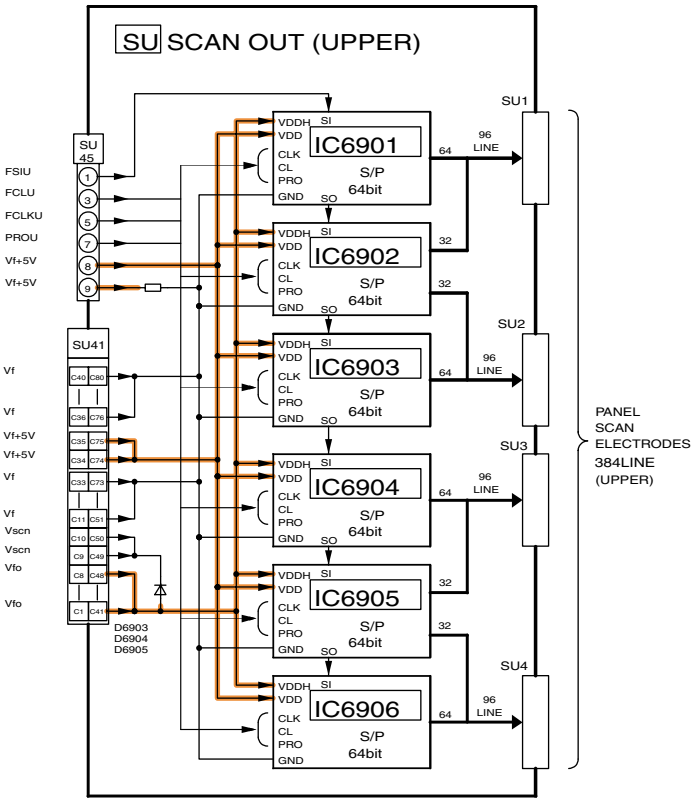

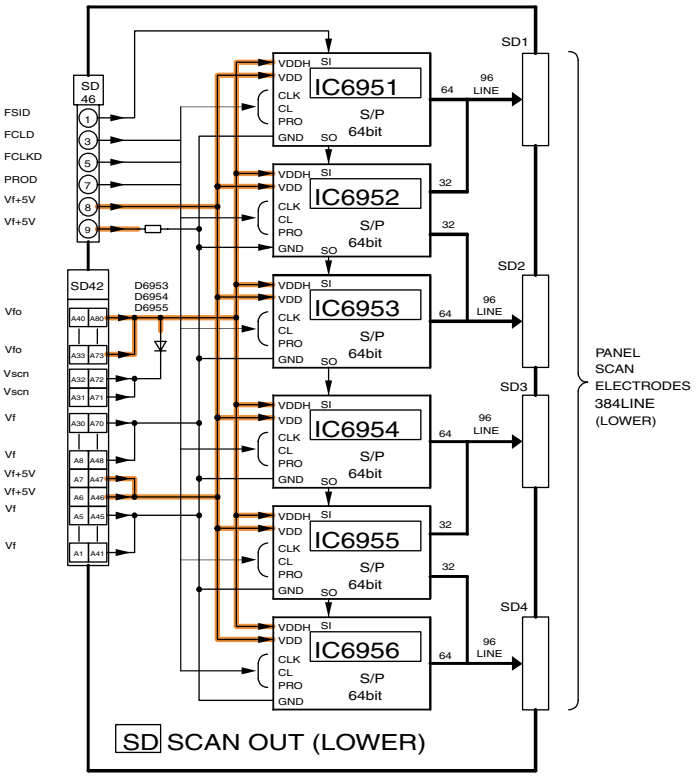

TH-R42PV70K
SU and SD-Board Block Diagram

TH-R42PV70K
SU and SD-Board Block Diagram

5.45. SU-Board (1 of 2) Schematic Diagram

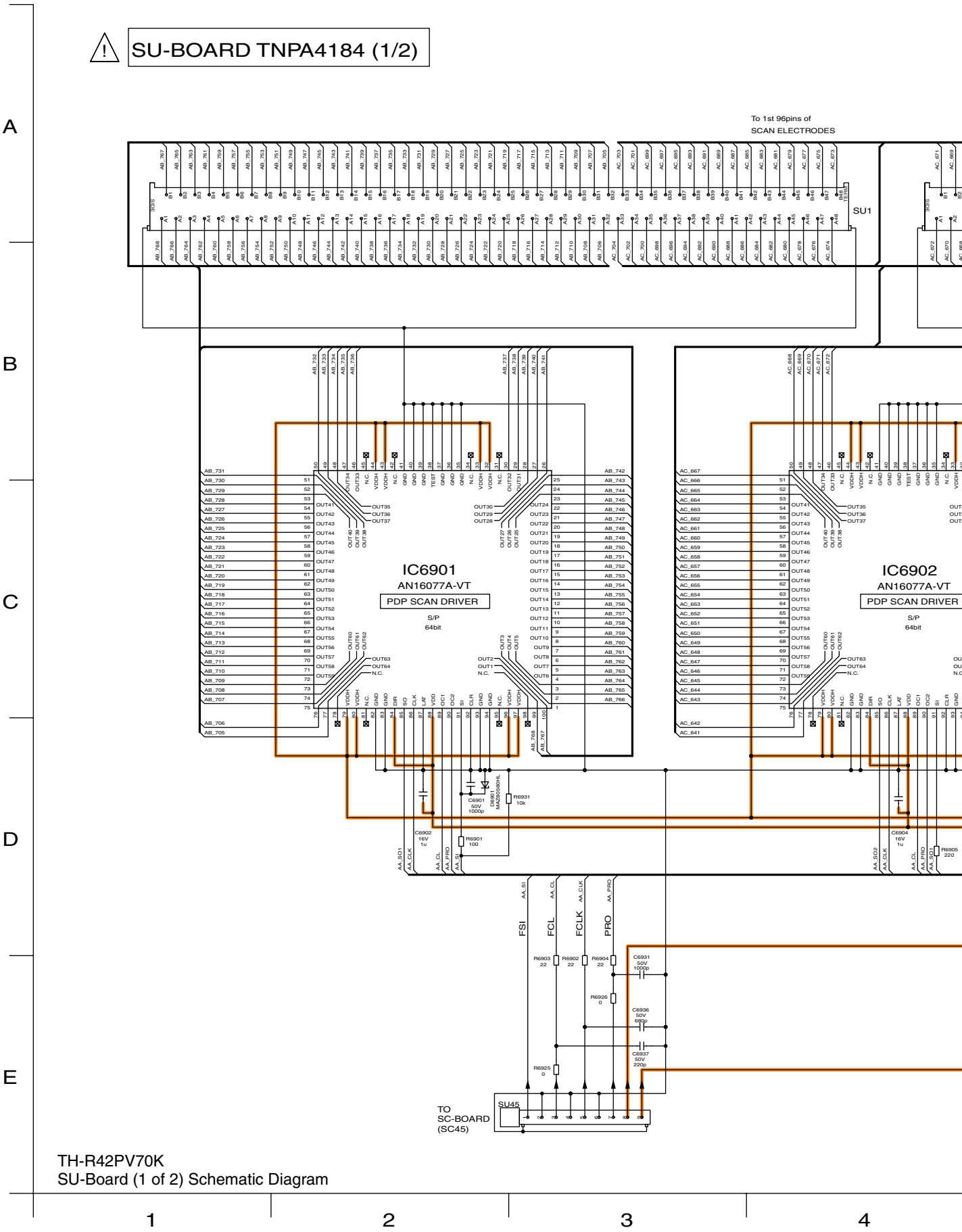

TH-R42PV70K
SU-Board (1 of 2) Schematic Diagram

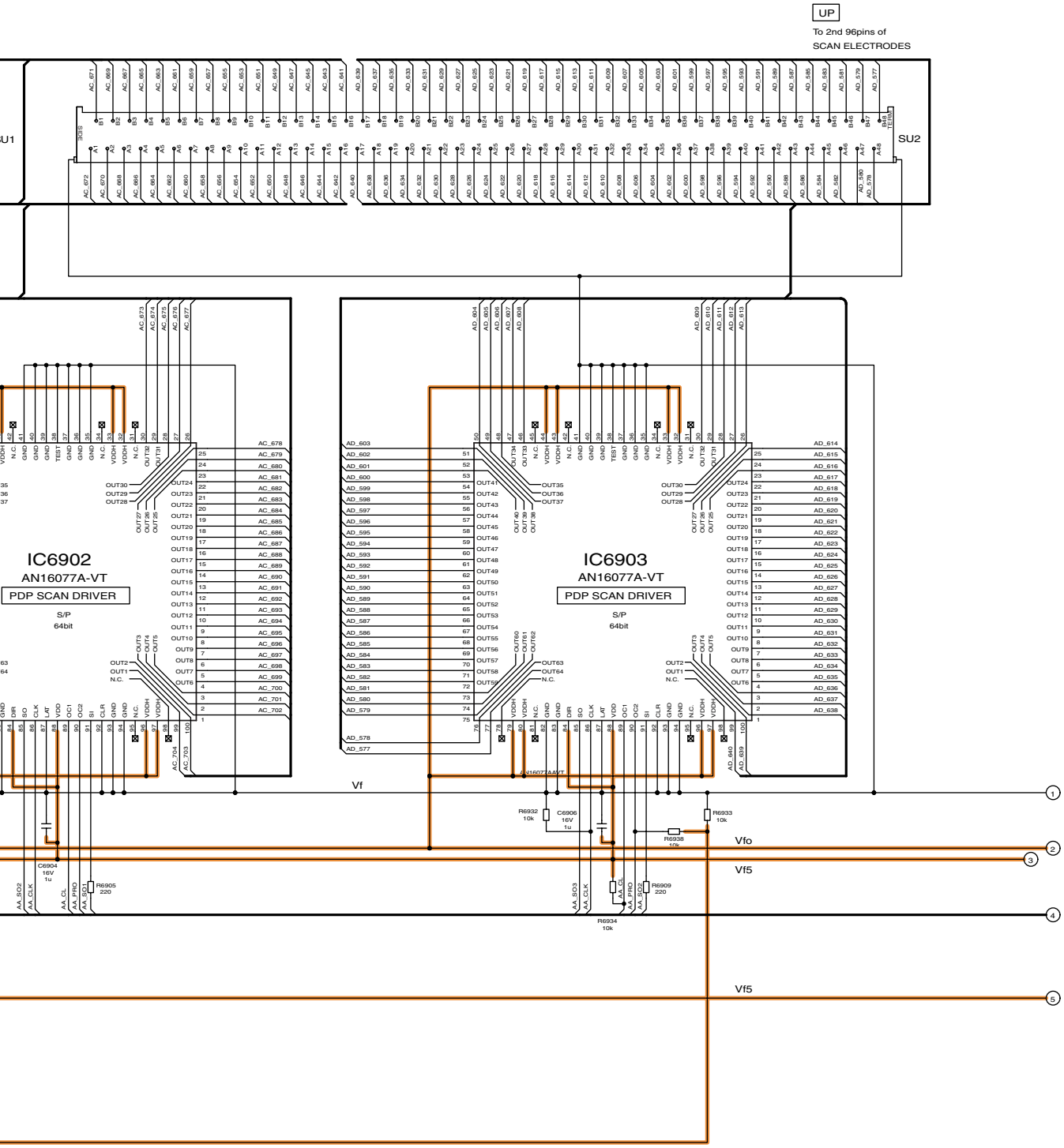

TH-R42PV70K
SU-Board (1 of 2) Schematic Diagram

4 5 6 7 8

5.46. SU-Board (2 of 2) Schematic Diagram

SU-BOARD TNPA4184 (2/2)

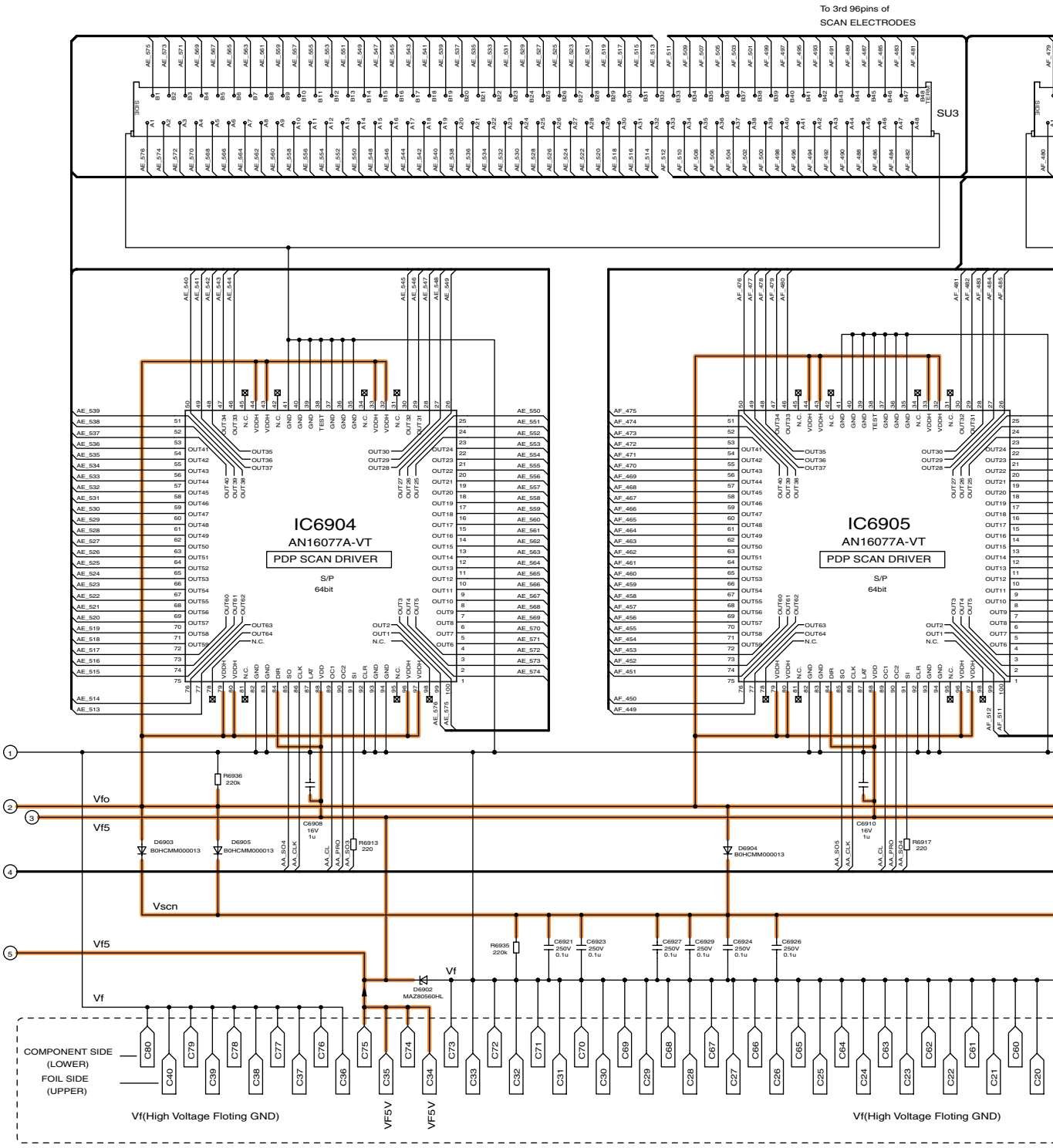

TH-R42PV70K
SU-Board (2 of 2) Schematic Diagram

8 9 10 11 12

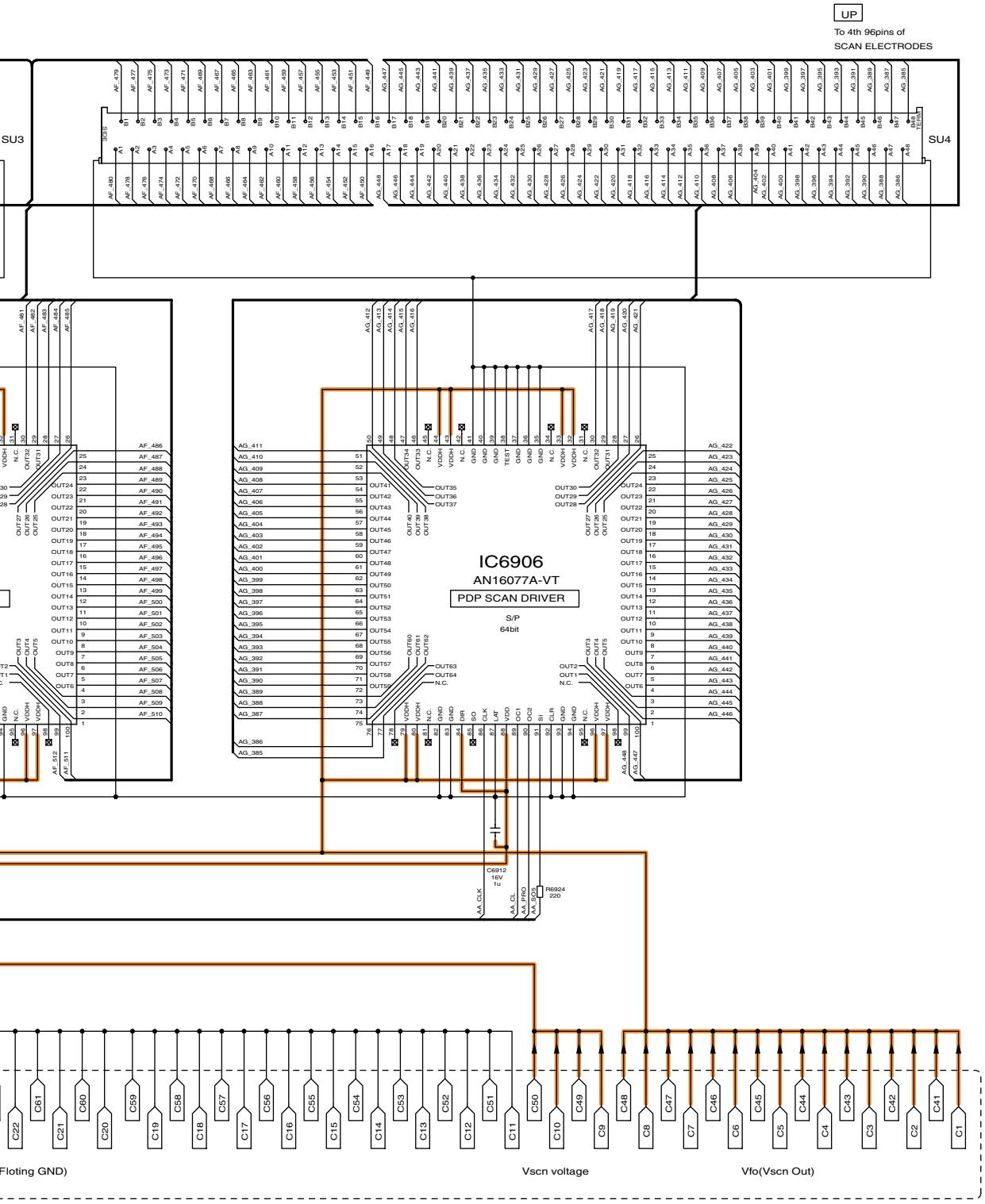

TH-R42PV70K
SU-Board (2 of 2) Schematic Diagram

12 13 14 15

5.47. SD-Board (1 of 2) Schematic Diagram

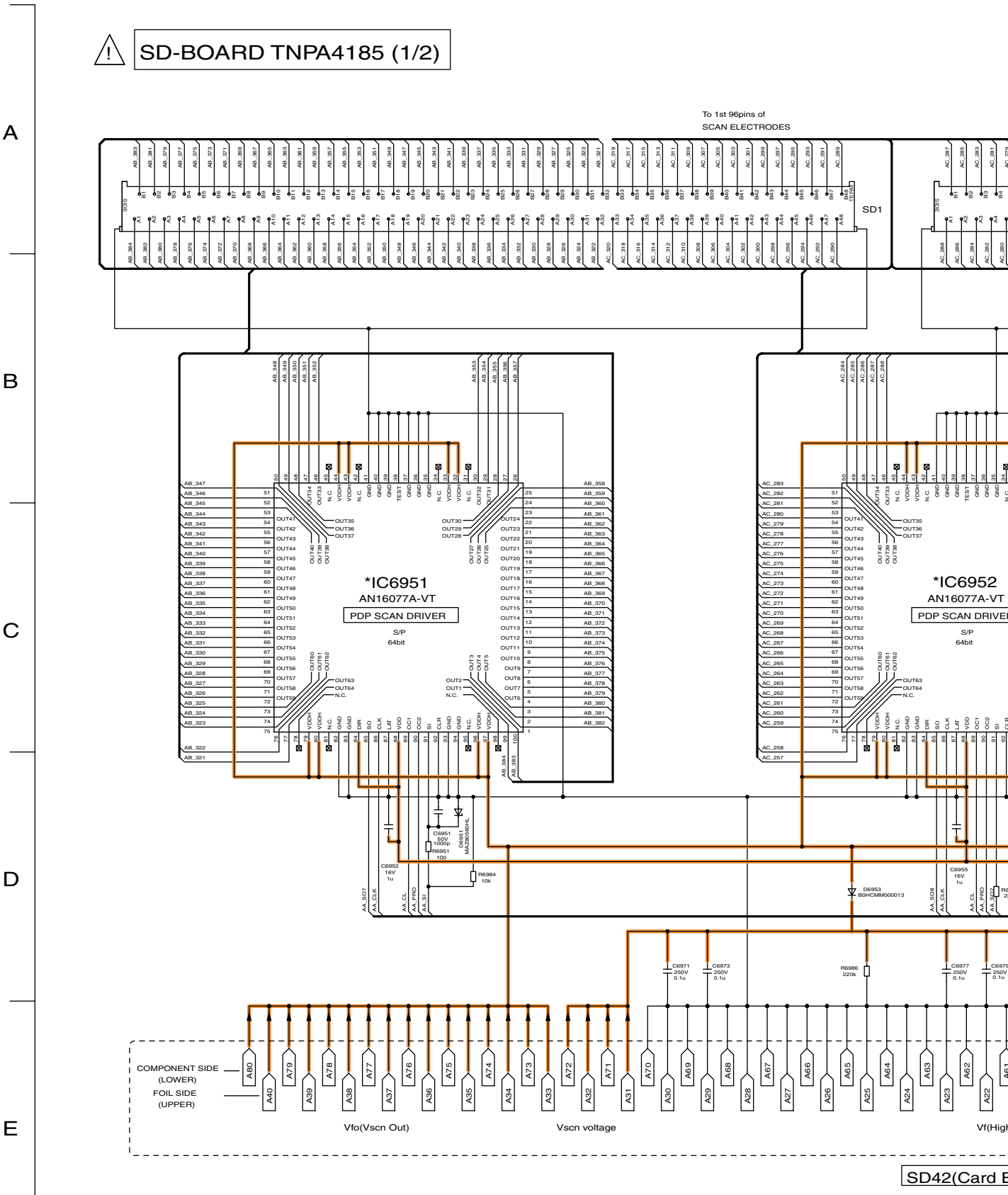

TH-R42PV70K
SD-Board (1 of 2) Schematic Diagram

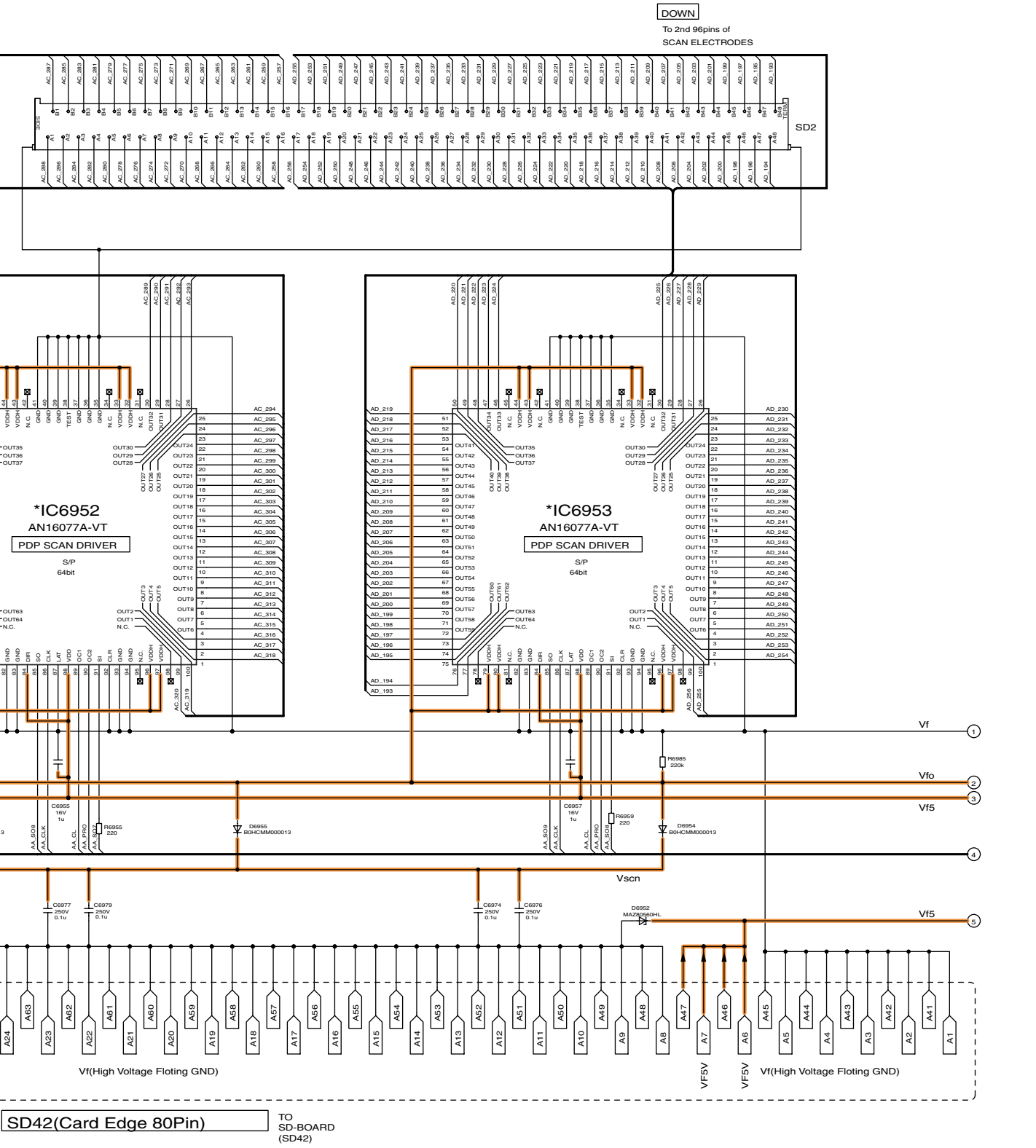

TH-R42PV70K
SD-Board (1 of 2) Schematic Diagram

4 5 6 7 8

5.48. SD-Board (2 of 2) Schematic Diagram

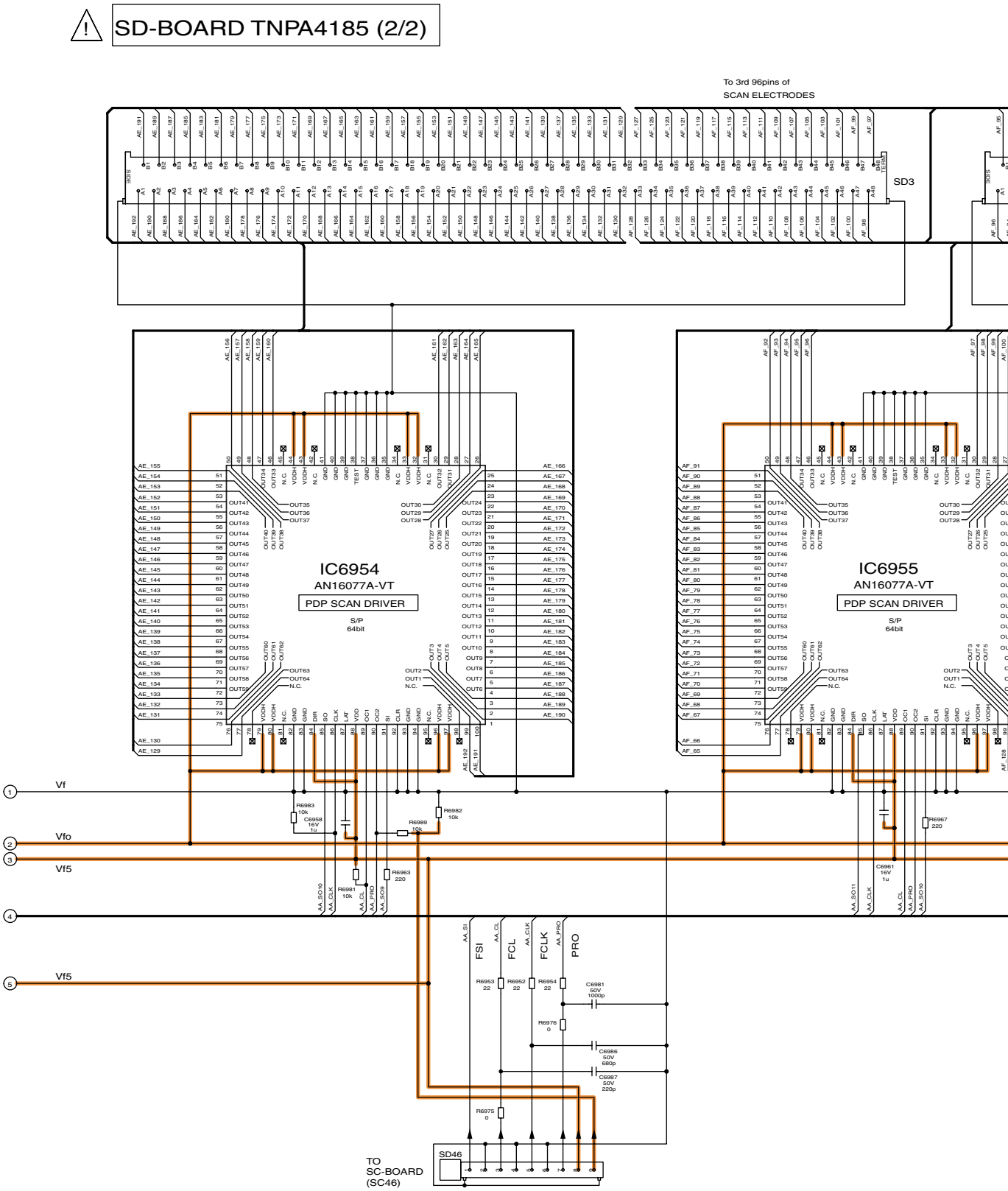

TH-R42PV70K
SD-Board (2 of 2) Schematic Diagram

8 9 10 11 12

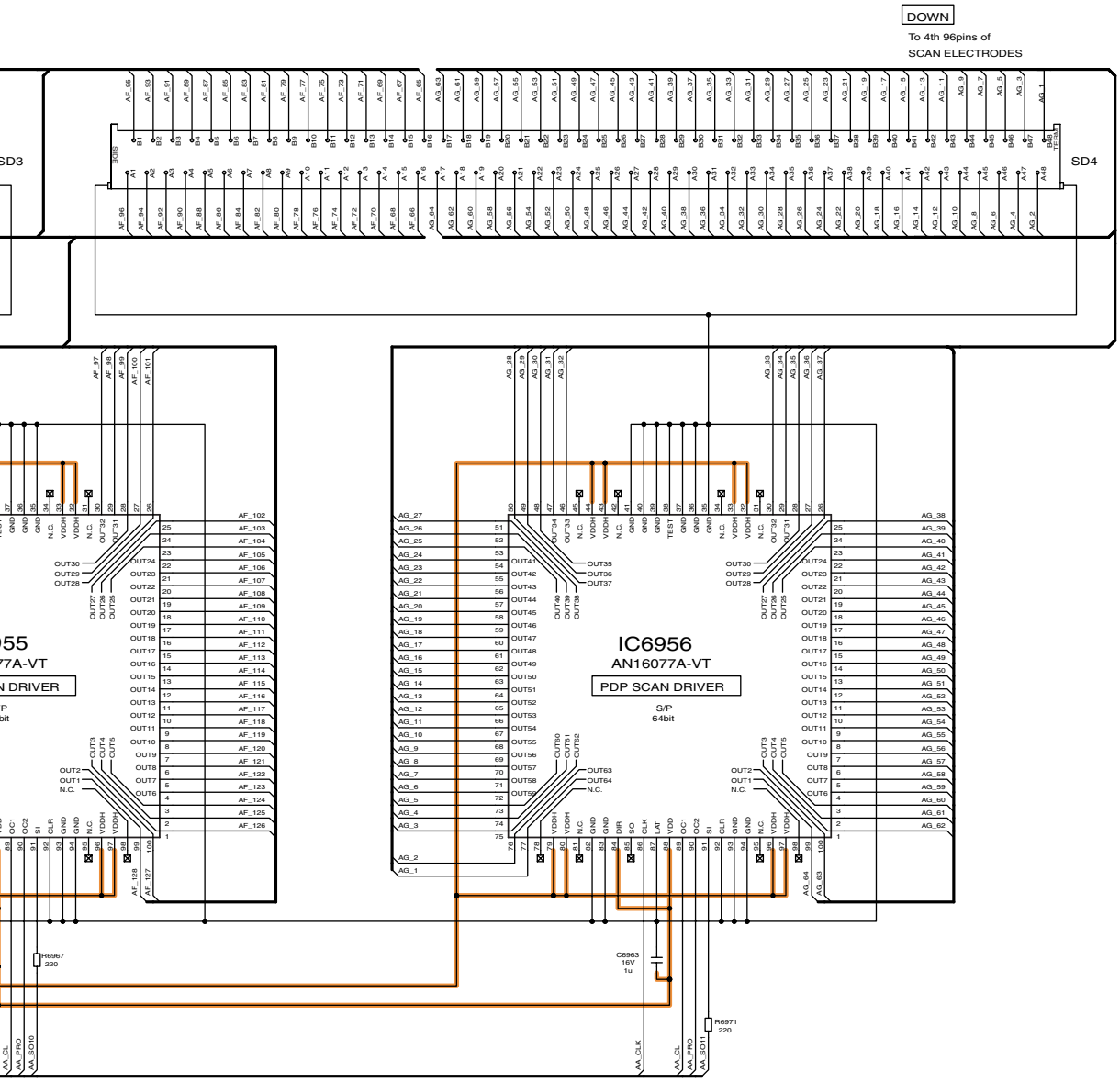

TH-R42PV70K
SD-Board (2 of 2) Schematic Diagram

12 13 14 15

5.49. SS-Board Block Diagram

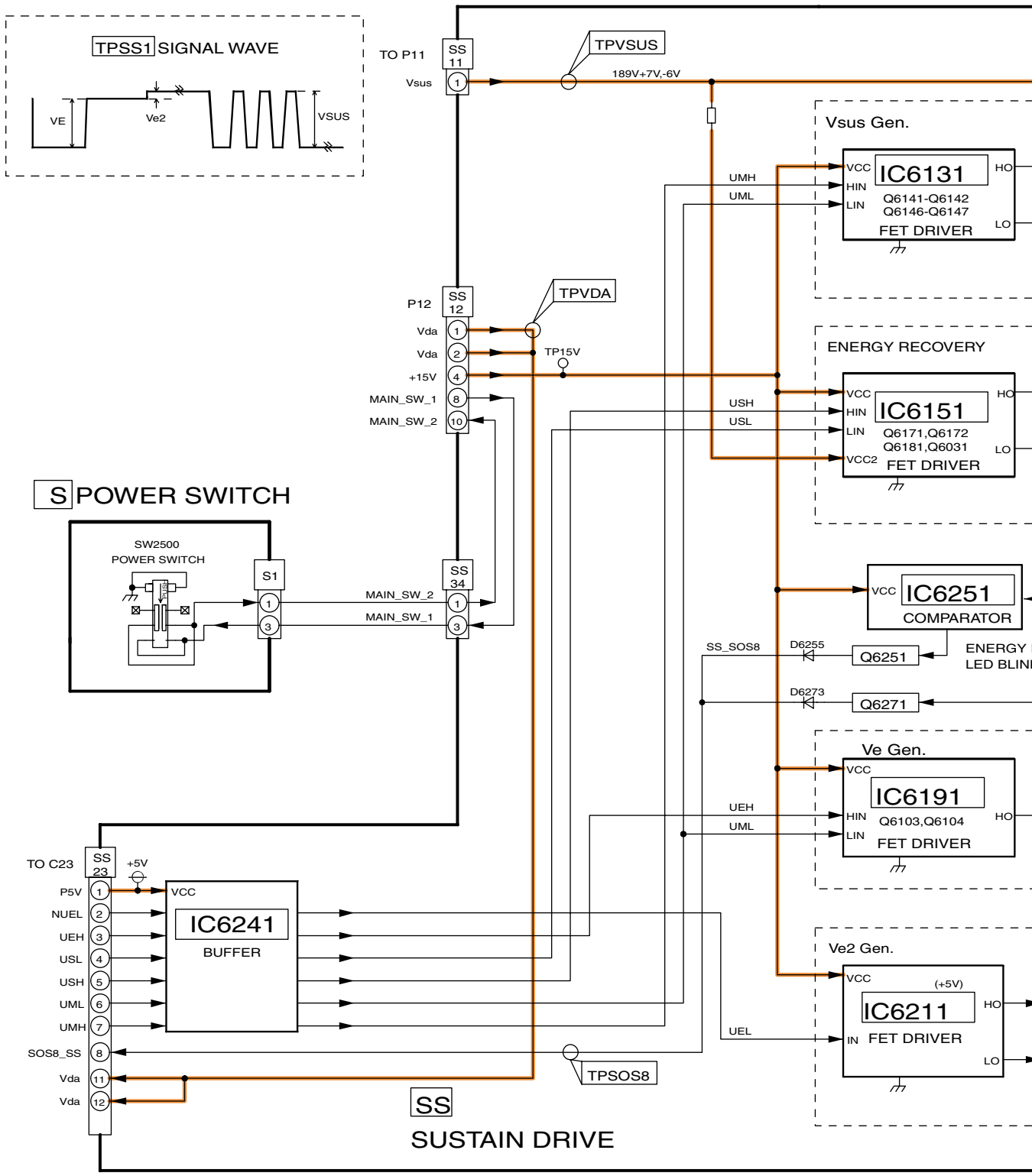

TH-R42PV70K
SS-Board Block Diagram

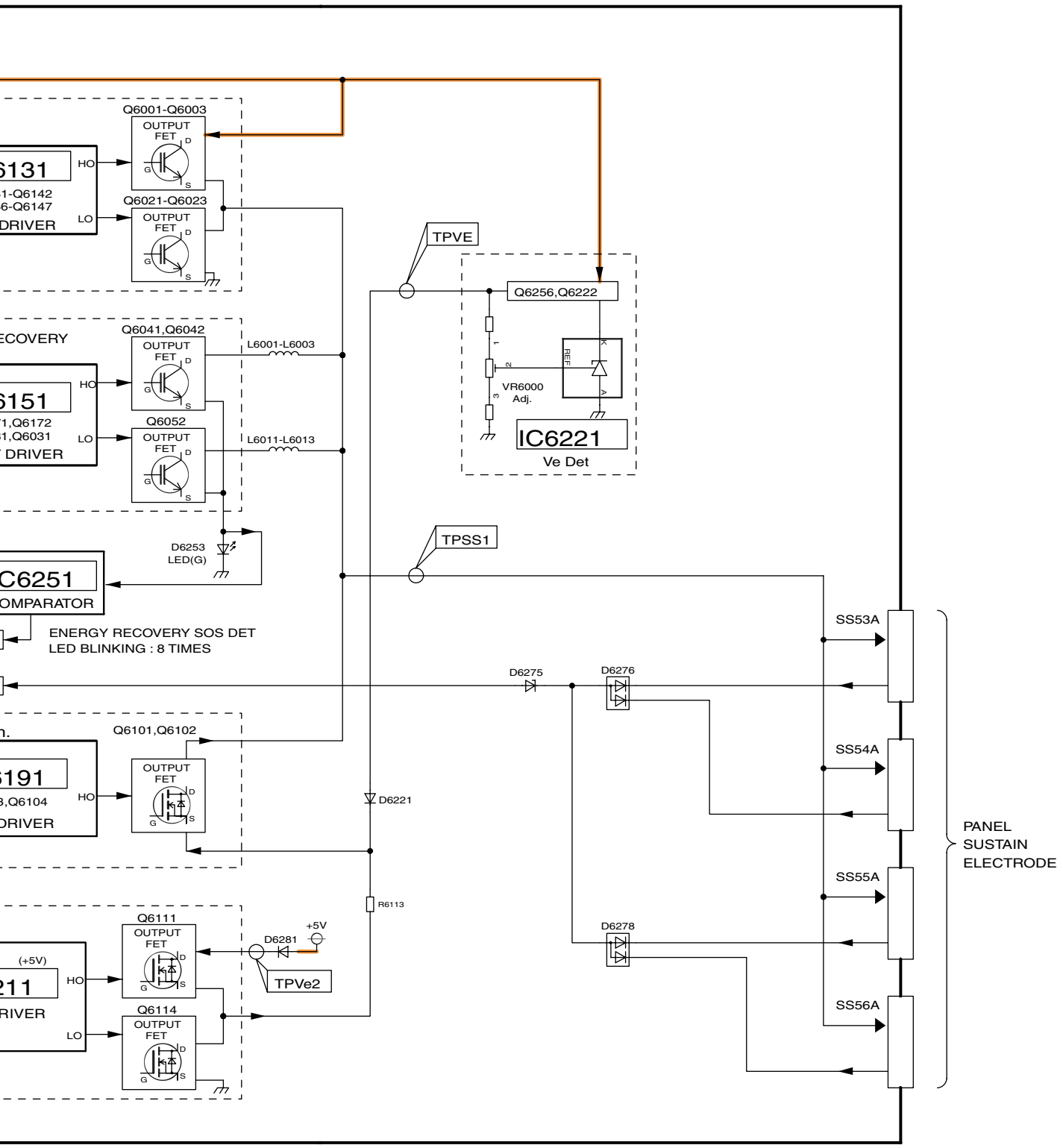

TH-R42PV70K
SS-Board Block Diagram

5.50. S and SS-Board (1 of 2) Schematic Diagram

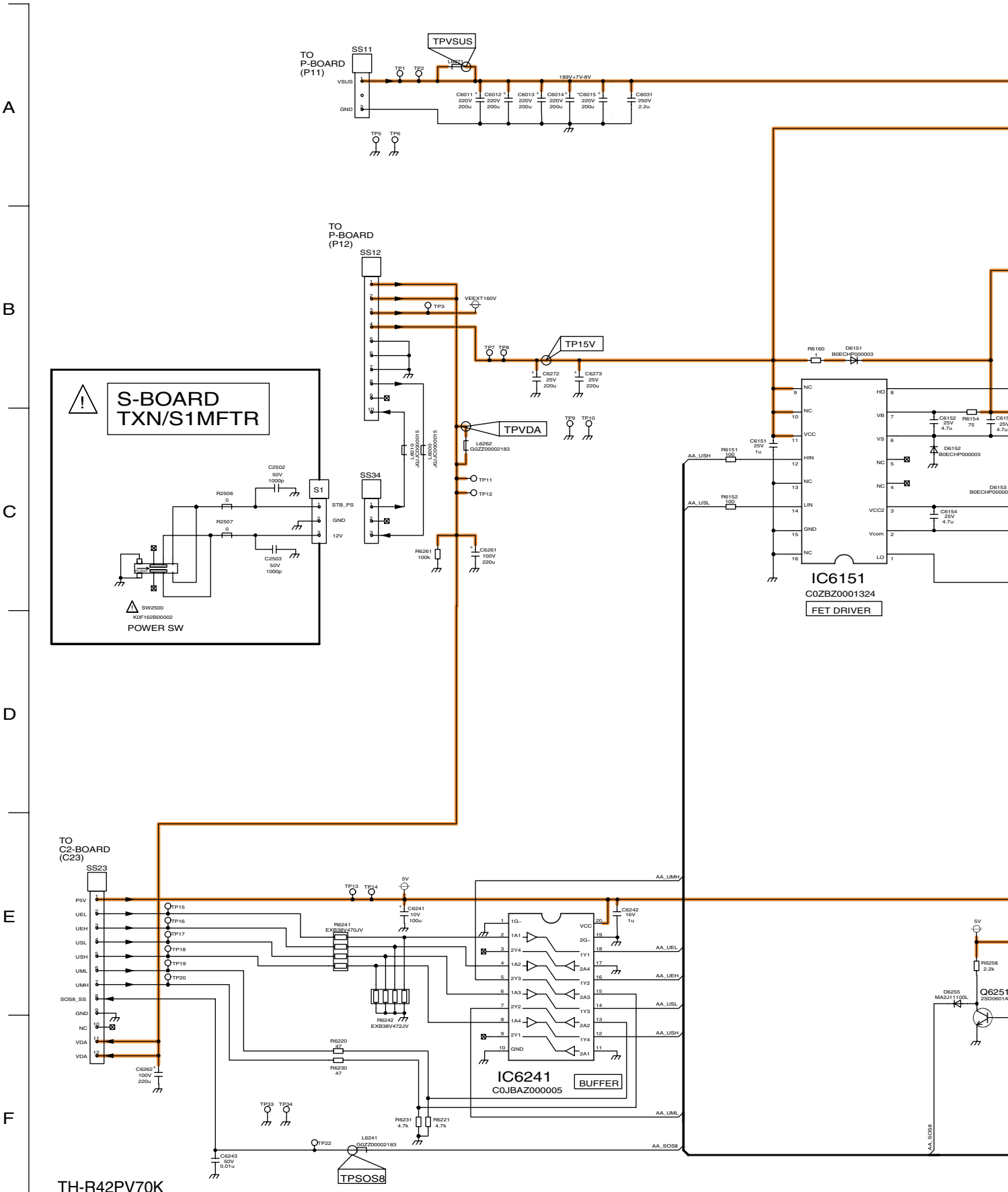

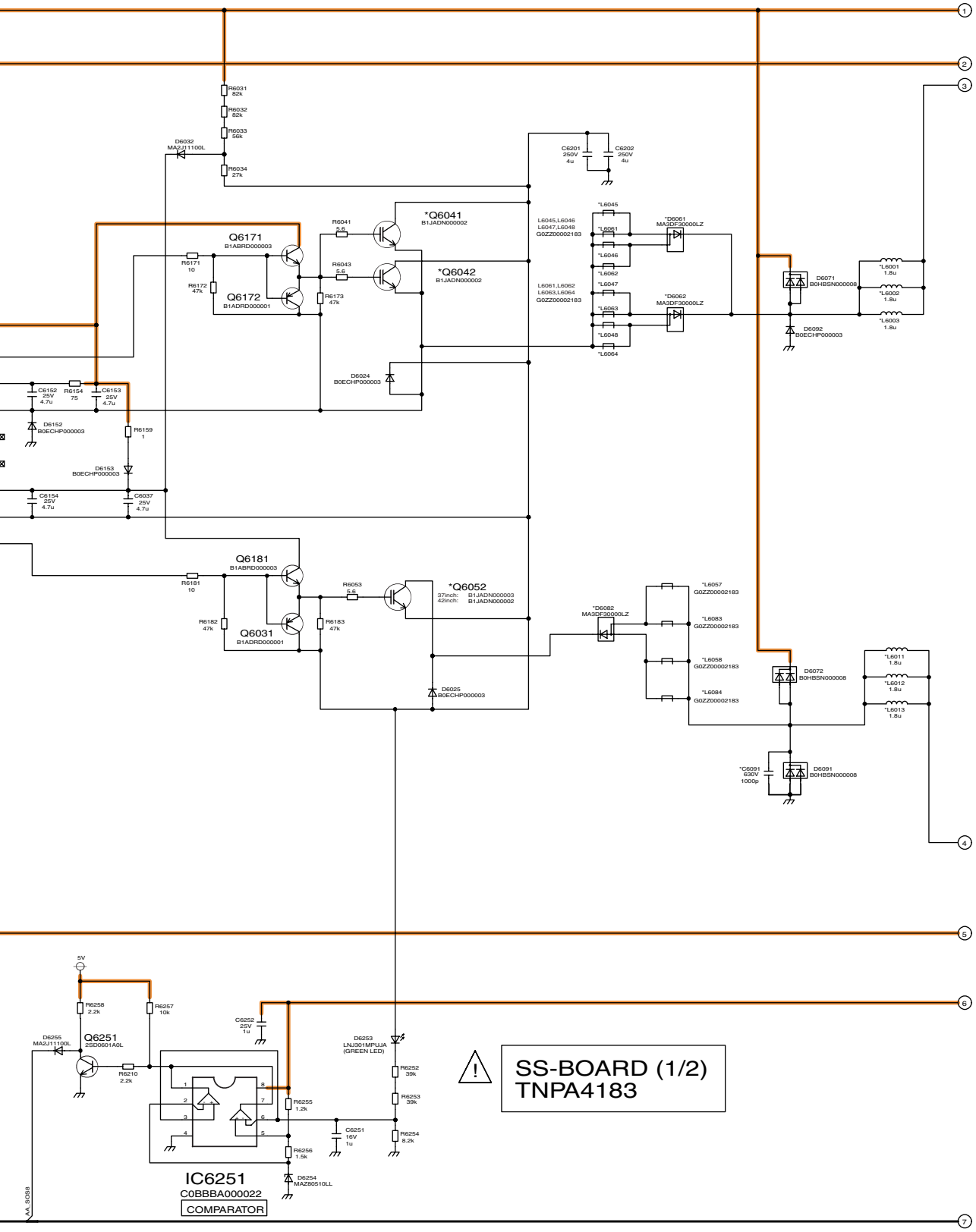

TH-R42PV70K
S and SS-Board (1 of 2) Schematic Diagram

5 6 7 8 9

5.51. SS-Board (2 of 2) Schematic Diagram

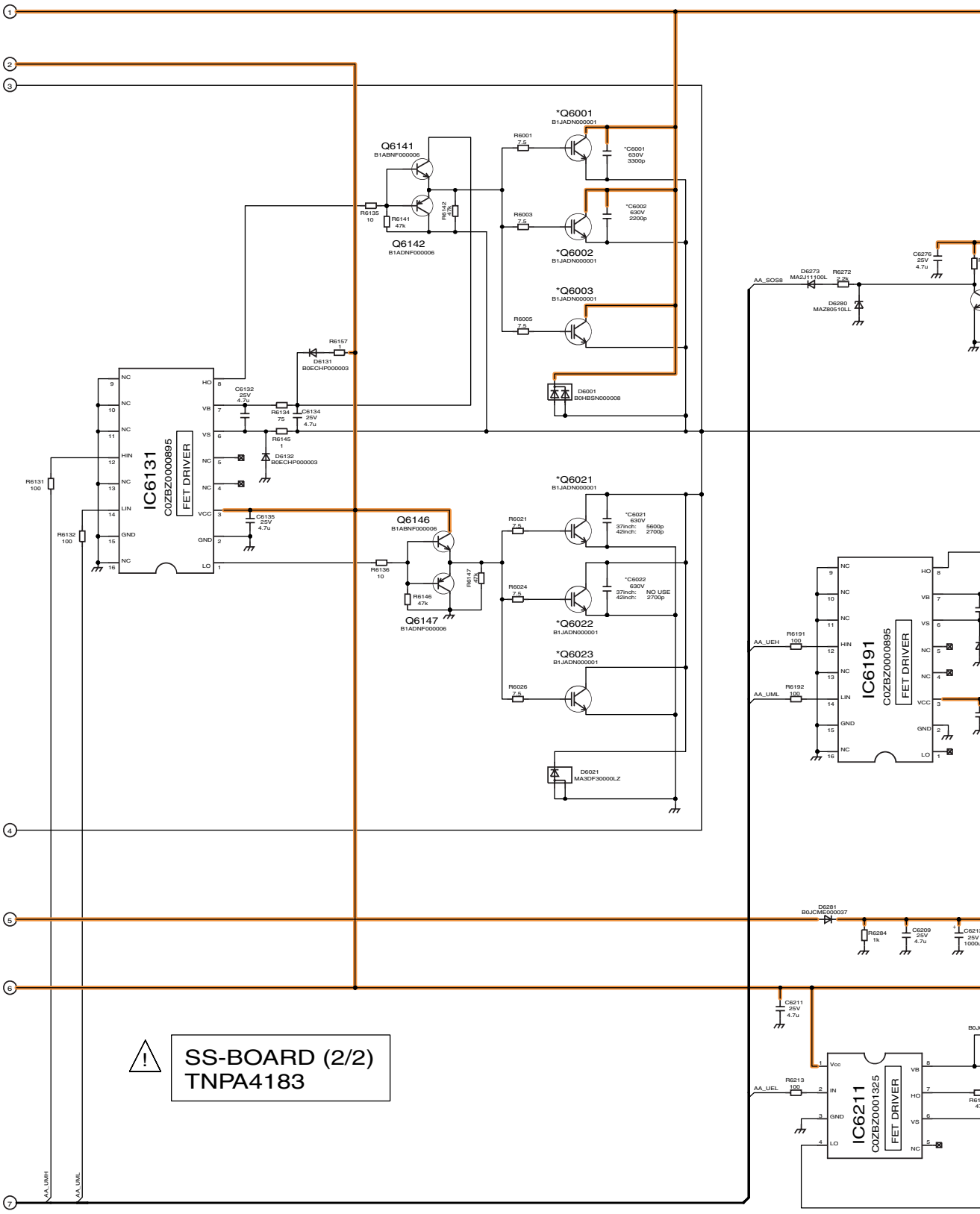

TH-R42PV70K
SS-Board (2 of 2) Schematic Diagram

10 11 12 13 14

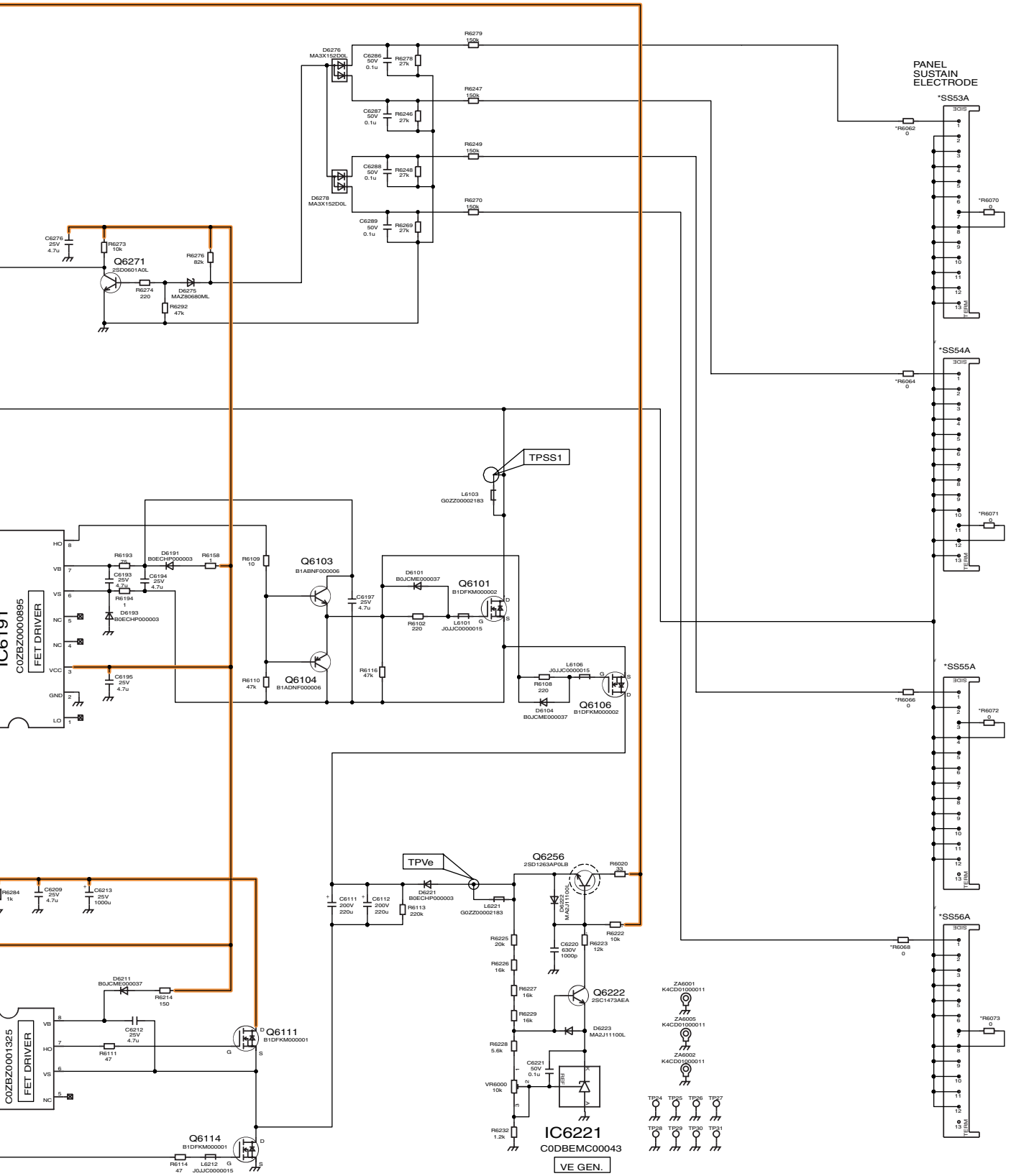

TH-R42PV70K
SS-Board (2 of 2) Schematic Diagram

14 15 16 17 18

5.52. K-Board Schematic Diagram

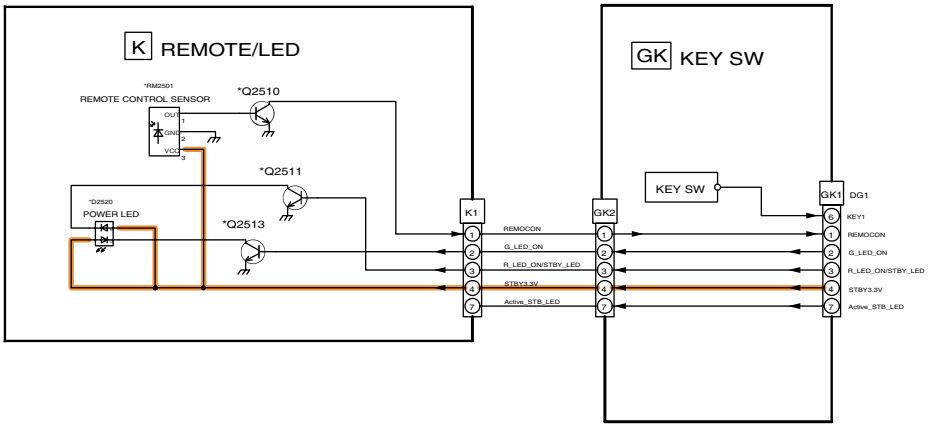

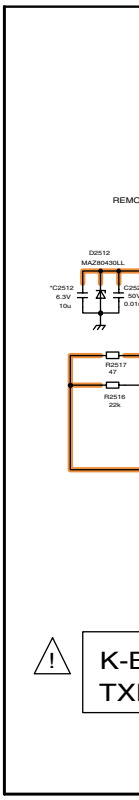

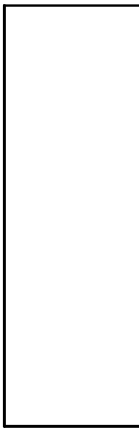

TH-R42PV70K
GK and K-Board Schematic Diagram

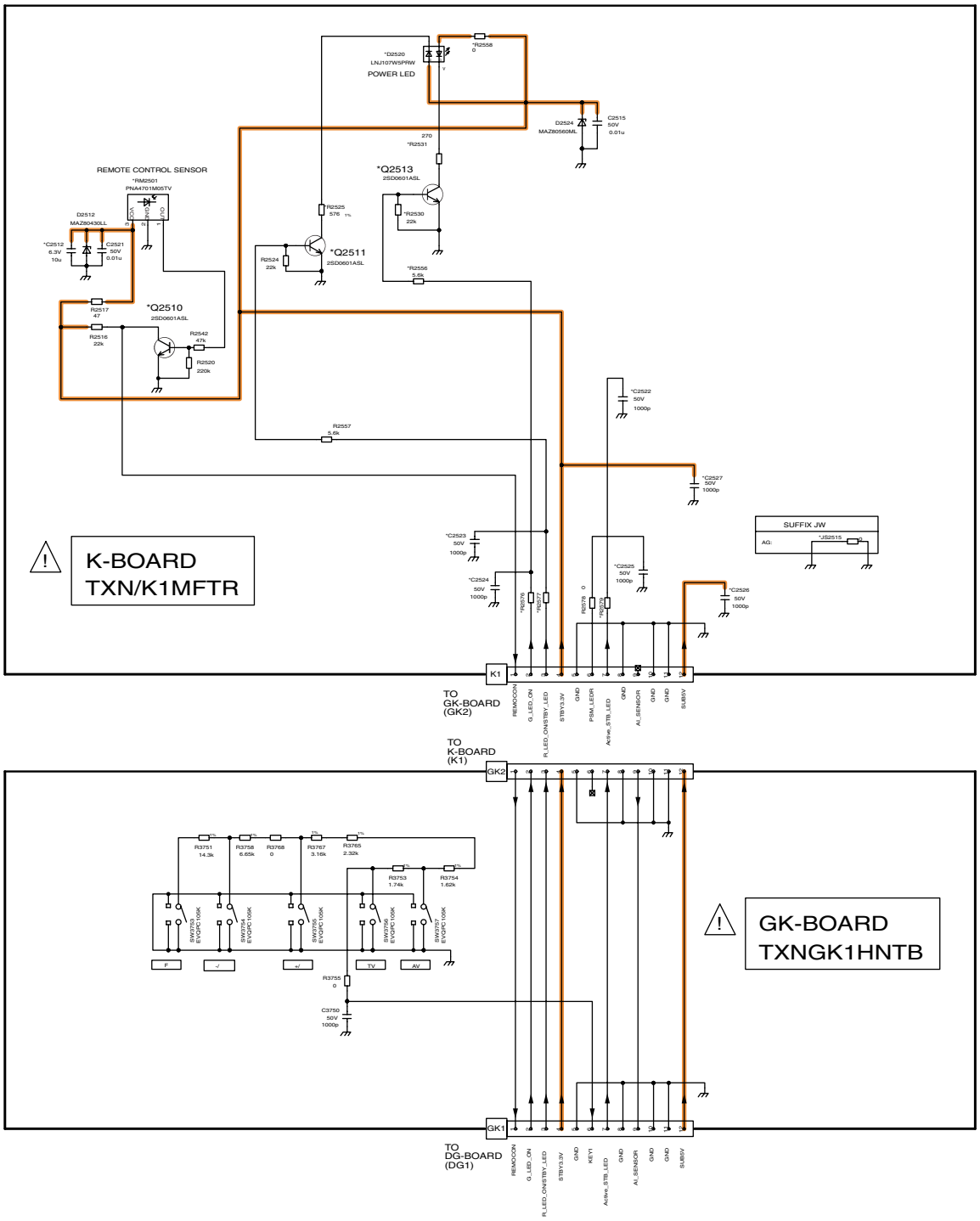

TH-R42PV70K
GK and K-Board Schematic Diagram

5 6 7 8 9