Vaddis, Flash & SDRAM Circuit Diagram

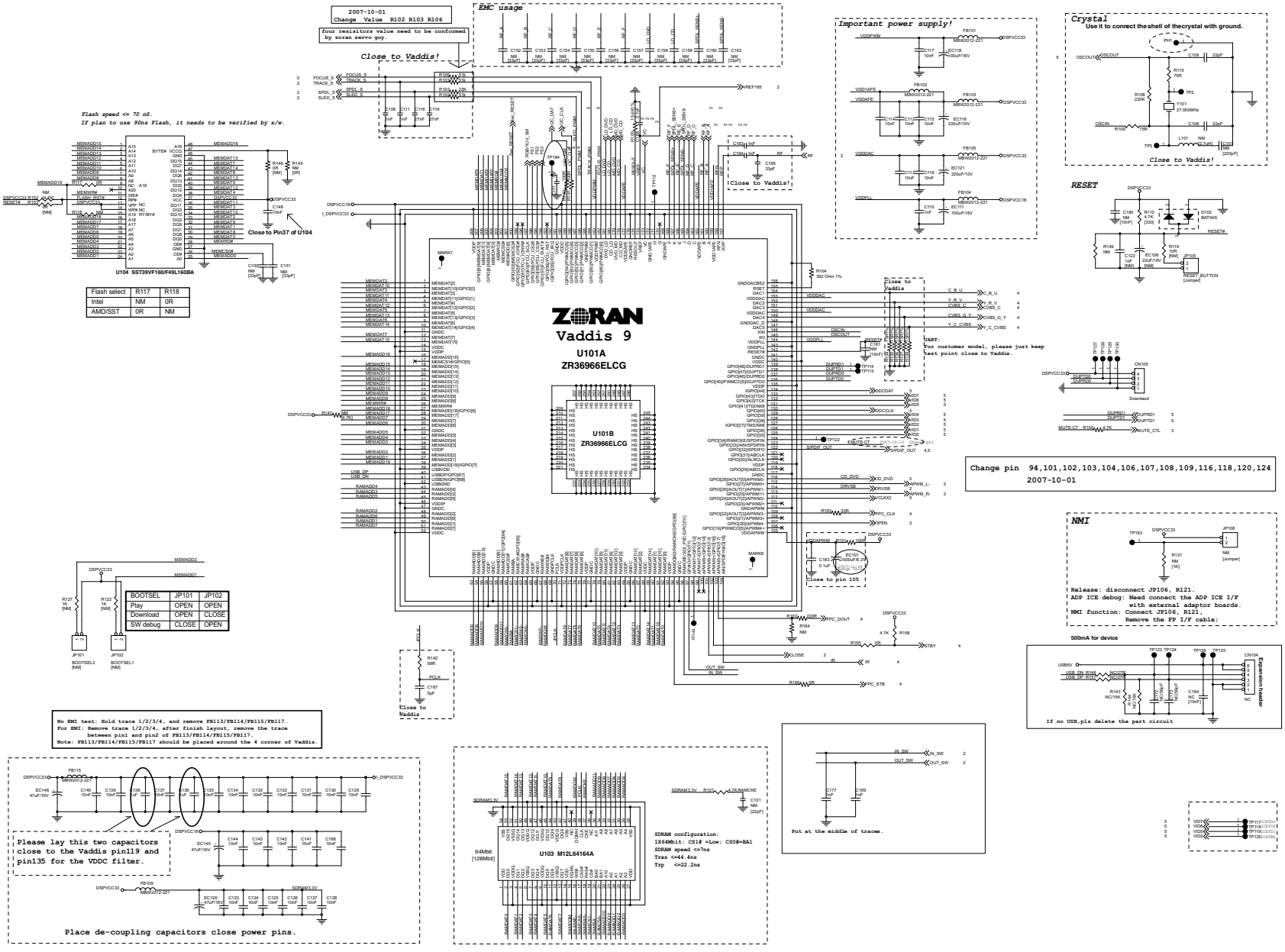

Motor Driver & Servo Circuit Diagram

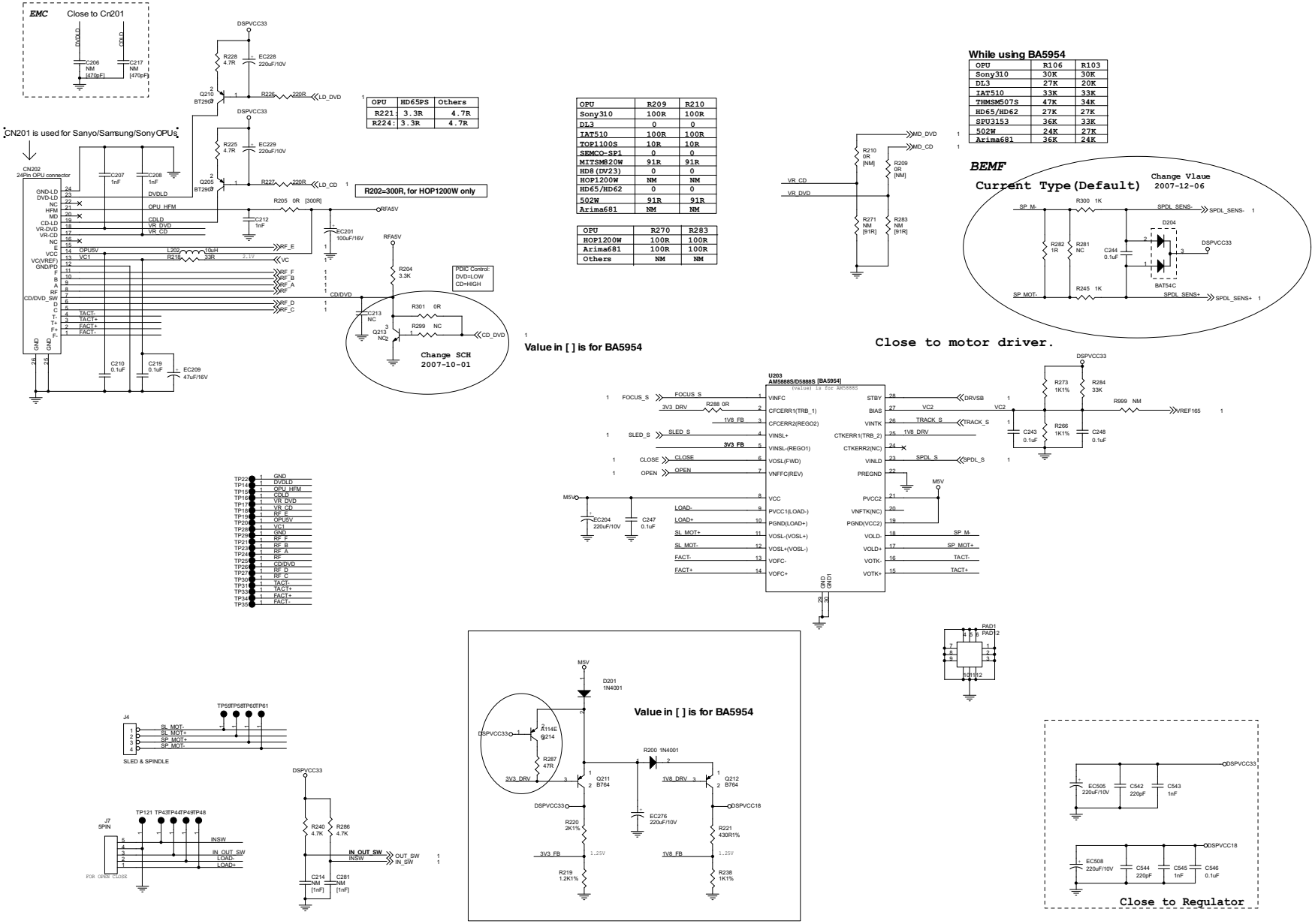

OPU	HD65PS	Others
R221:	3.3R	4.7R
R224:	3.3R	4.7R

OPU	R209	R210
Sony310	100R	100R
DL3	0	0
IAT510	100R	100R
TOP1100S	10R	10R
SEMCO-SP1	0	0
MITSMB20W	91R	91R
HD8(DV23)	0	0
HOP1200W	NM	NM
HD65/HD62	0	0
502W	91R	91R
Arima681	NM	NM

OPU	R270	R283
HOP1200W	100R	100R
Arima681	100R	100R
Others	NM	NM

OPU	R106	R103
Sony310	30K	30K
DL3	27K	20K
IAT510	33K	33K
THMSM507S	47K	34K
HD65/HD62	27K	27K
SPU3153	36K	33K
502W	24K	27K
Arima681	36K	24K