11.4 SMPS Circuit Diagram : 220V (1/2)

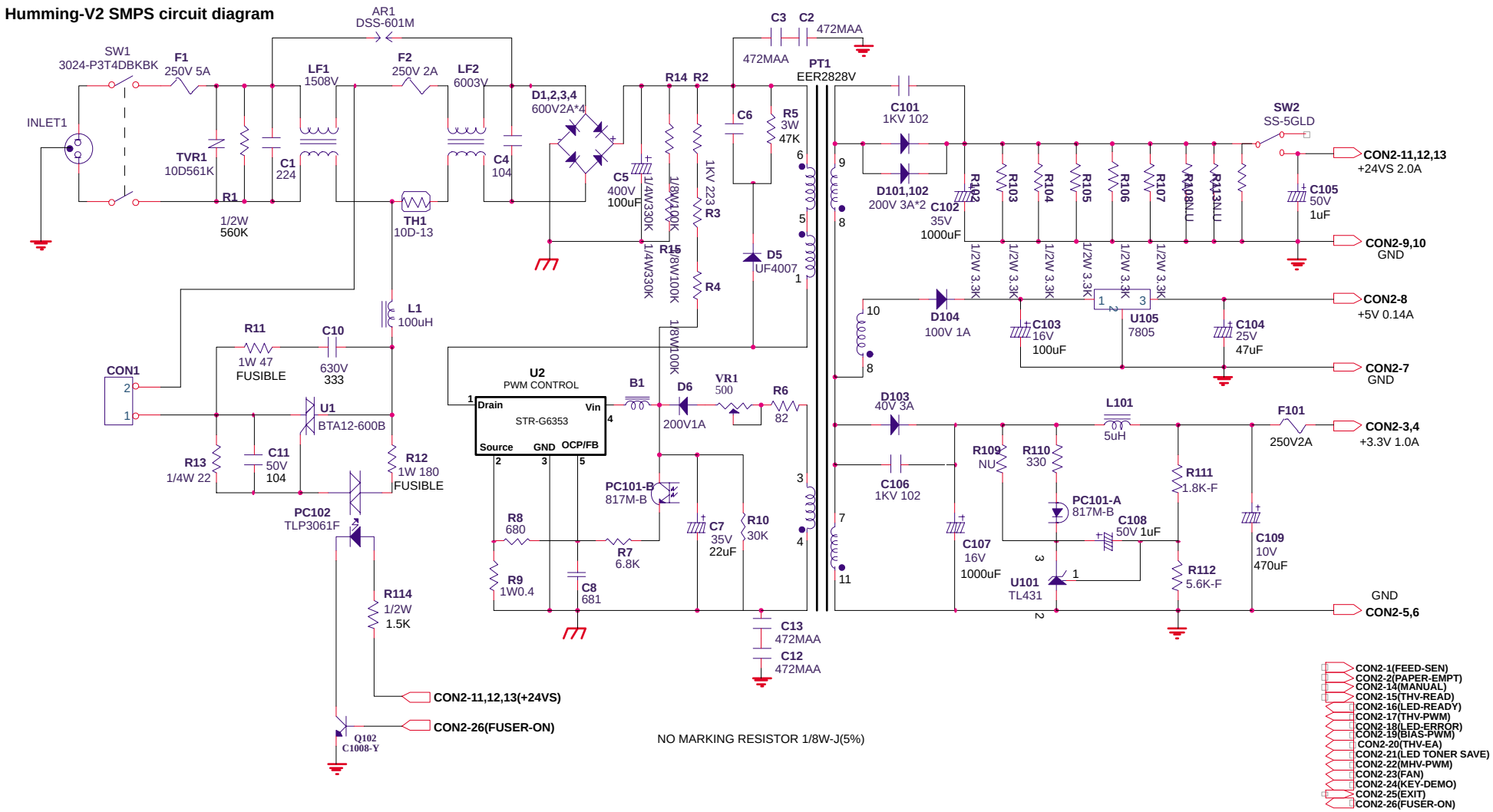

- This Document can not be used without Samsung's authorization -