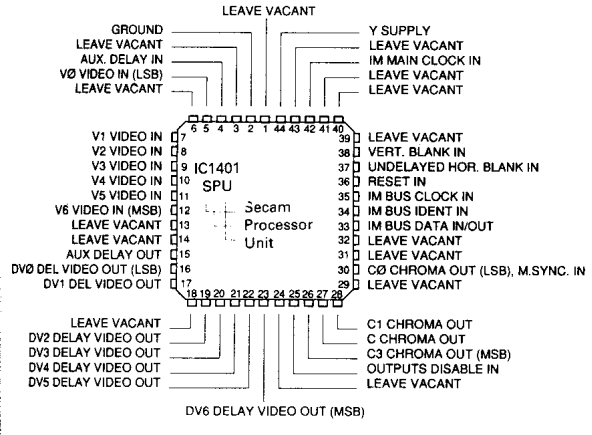
LEAVE VACANT
GROUND
LEAVE VACANT
AUX. DELAY IN
VØ VIDEO IN (LSB)
LEAVE VACANT
Y SUPPLY
LEAVE VACANT
IM MAIN CLOCK IN
LEAVE VACANT
LEAVE VACANT
V1 VIDEO IN
V2 VIDEO IN
V3 VIDEO IN
V4 VIDEO IN
V5 VIDEO IN
V6 VIDEO IN (MSB)
LEAVE VACANT
LEAVE VACANT
AUX DELAY OUT
DVØ DEL VIDEO OUT (LSB)
DV1 DEL VIDEO OUT
IC1401
SPU
Secam
Processor
Unit
LEAVE VACANT
VERT. BLANK IN
UNDELAYED HOR. BLANK IN
RESET IN
IM BUS CLOCK IN
IM BUS IDENT IN
IM BUS DATA IN/OUT
LEAVE VACANT
LEAVE VACANT
CØ CHROMA OUT (LSB), M.SYNC. IN
LEAVE VACANT
LEAVE VACANT
DV2 DELAY VIDEO OUT
DV3 DELAY VIDEO OUT
DV4 DELAY VIDEO OUT
DV5 DELAY VIDEO OUT
DV6 DELAY VIDEO OUT (MSB)
C1 CHROMA OUT
C CHROMA OUT
C3 CHROMA OUT (MSB)
OUTPUTS DISABLE IN
LEAVE VACANT

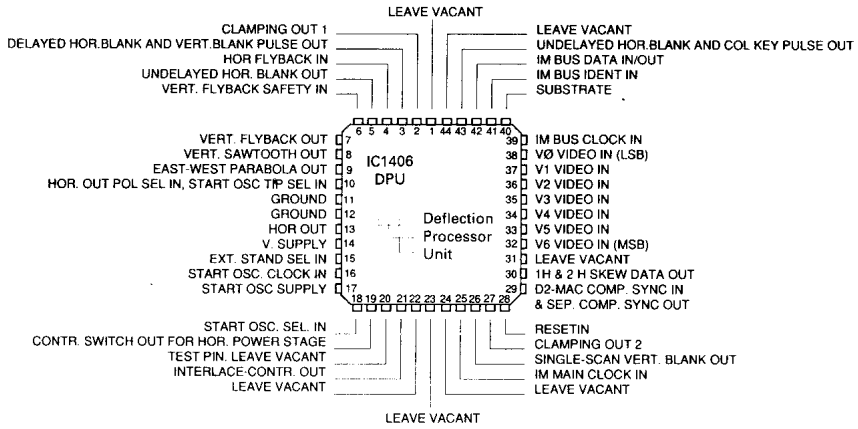
LEAVE VACANT
CLAMPING OUT 1
DELAYED HOR.BLANK AND VERT.BLANK PULSE OUT
HOR FLYBACK IN
UNDELAYED HOR. BLANK OUT
VERT. FLYBACK SAFETY IN
LEAVE VACANT
UNDELAYED HOR.BLANK AND COL KEY PULSE OUT
IM BUS DATA IN/OUT
IM BUS IDENT IN
SUBSTRATE
VERT. FLYBACK OUT
VERT. SAWTOOTH OUT
EAST-WEST PARABOLA OUT
HOR. OUT POL SEL IN, START OSC T/P SEL IN
GROUND
GROUND
HOR OUT
V. SUPPLY
EXT. STAND SEL IN
START OSC. CLOCK IN
START OSC SUPPLY
IC1406
DPU
Deflection
Processor
Unit
IM BUS CLOCK IN
VØ VIDEO IN (LSB)
V1 VIDEO IN
V2 VIDEO IN
V3 VIDEO IN
V4 VIDEO IN
V5 VIDEO IN
V6 VIDEO IN (MSB)
LEAVE VACANT
1H & 2 H SKEW DATA OUT
D2-MAC COMP. SYNC IN
& SEP. COMP. SYNC OUT
START OSC. SEL. IN
CONTR. SWITCH OUT FOR HOR. POWER STAGE
TEST PIN. LEAVE VACANT
INTERLACE-CONTR. OUT
LEAVE VACANT
RESETIN
CLAMPING OUT 2
SINGLE-SCAN VERT. BLANK OUT
IM MAIN CLOCK IN
LEAVE VACANT
LEAVE VACANT

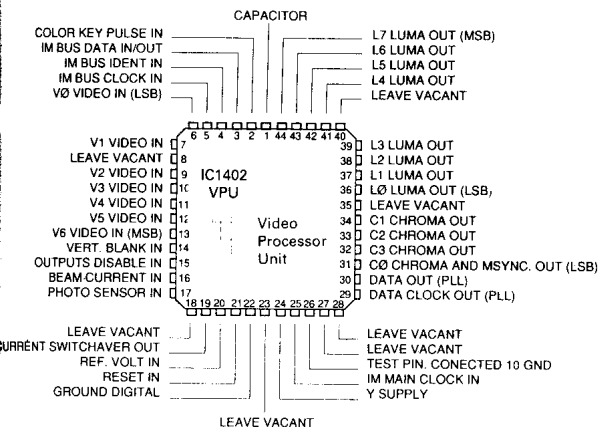
CAPACITOR
COLOR KEY PULSE IN
IM BUS DATA IN/OUT
IM BUS IDENT IN
IM BUS CLOCK IN
VØ VIDEO IN (LSB)
L7 LUMA OUT (MSB)
L6 LUMA OUT
L5 LUMA OUT
L4 LUMA OUT
LEAVE VACANT
V1 VIDEO IN
LEAVE VACANT
V2 VIDEO IN
V3 VIDEO IN
V4 VIDEO IN
V5 VIDEO IN
V6 VIDEO IN (MSB)
VERT. BLANK IN
OUTPUTS DISABLE IN
BEAM CURRENT IN
PHOTO SENSOR IN
IC1402
VPU
Video
Processor
Unit
L3 LUMA OUT
L2 LUMA OUT
L1 LUMA OUT
LØ LUMA OUT (LSB)
LEAVE VACANT
C1 CHROMA OUT
C2 CHROMA OUT
C3 CHROMA OUT
CØ CHROMA AND MSYNC. OUT (LSB)
DATA OUT (PLL)
DATA CLOCK OUT (PLL)
LEAVE VACANT
CURRENT SWITCHAVER OUT
REF. VOLT IN
RESET IN
GROUND DIGITAL
LEAVE VACANT
LEAVE VACANT
LEAVE VACANT
TEST PIN. CONECTED TO GND
IM MAIN CLOCK IN
Y SUPPLY
LEAVE VACANT

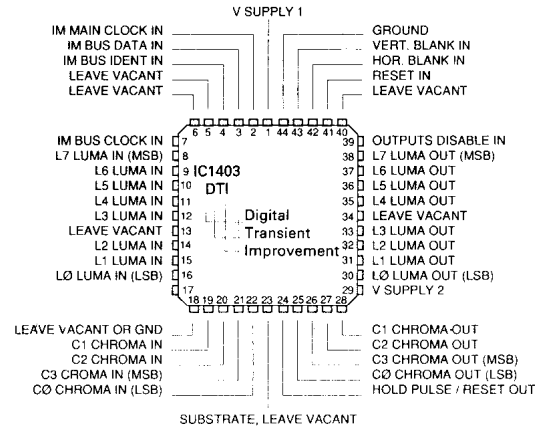
V SUPPLY 1
IM MAIN CLOCK IN
IM BUS DATA IN
IM BUS IDENT IN
LEAVE VACANT
LEAVE VACANT
GROUND
VERT. BLANK IN
HOR. BLANK IN
RESET IN
LEAVE VACANT
IM BUS CLOCK IN
L7 LUMA IN (MSB)
L6 LUMA IN
L5 LUMA IN
L4 LUMA IN
L3 LUMA IN
LEAVE VACANT
L2 LUMA IN
L1 LUMA IN
LØ LUMA IN (LSB)
IC1403
DTI
Digital
Transient
Improvement
OUTPUTS DISABLE IN
L7 LUMA OUT (MSB)
L6 LUMA OUT
L5 LUMA OUT
L4 LUMA OUT
LEAVE VACANT
L3 LUMA OUT
L2 LUMA OUT
L1 LUMA OUT
LØ LUMA OUT (LSB)
V SUPPLY 2
LEAVE VACANT OR GND
C1 CHROMA IN
C2 CHROMA IN
C3 CROMA IN (MSB)
CØ CHROMA IN (LSB)
C1 CHROMA OUT
C2 CHROMA OUT
C3 CHROMA OUT (MSB)
CØ CHROMA OUT (LSB)
HOLD PULSE / RESET OUT
SUBSTRATE, LEAVE VACANT

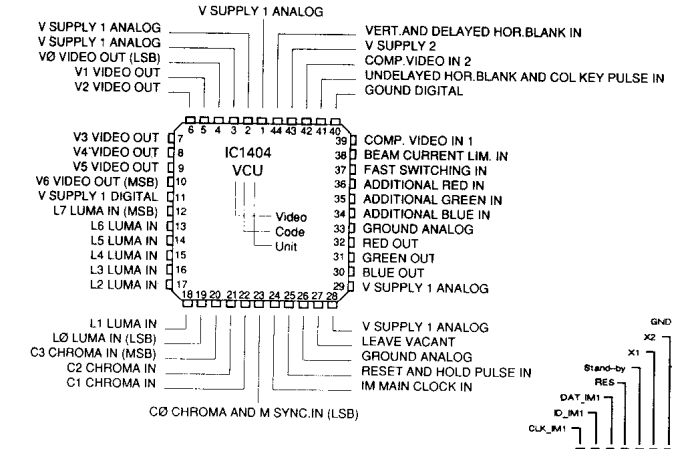
V SUPPLY 1 ANALOG
V SUPPLY 1 ANALOG
V SUPPLY 1 ANALOG
VØ VIDEO OUT (LSB)
V1 VIDEO OUT
V2 VIDEO OUT
VERT.AND DELAYED HOR.BLANK IN
V SUPPLY 2
COMP.VIDEO IN 2
UNDELAYED HOR.BLANK AND COL KEY PULSE IN
GOUND DIGITAL
V3 VIDEO OUT
V4 VIDEO OUT
V5 VIDEO OUT
V6 VIDEO OUT (MSB)
V SUPPLY 1 DIGITAL
L7 LUMA IN (MSB)
L6 LUMA IN
L5 LUMA IN
L4 LUMA IN
L3 LUMA IN
L2 LUMA IN
IC1404
VCU
Video
Code
Unit
COMP. VIDEO IN 1
BEAM CURRENT LIM. IN
FAST SWITCHING IN
ADDITIONAL RED IN
ADDITIONAL GREEN IN
ADDITIONAL BLUE IN
GROUND ANALOG
RED OUT
GREEN OUT
BLUE OUT
V SUPPLY 1 ANALOG
L1 LUMA IN
LØ LUMA IN (LSB)
C3 CHROMA IN (MSB)
C2 CHROMA IN
C1 CHROMA IN
CØ CHROMA AND M SYNC.IN (LSB)
V SUPPLY 1 ANALOG
LEAVE VACANT
GROUND ANALOG
RESET AND HOLD PULSE IN
IM MAIN CLOCK IN

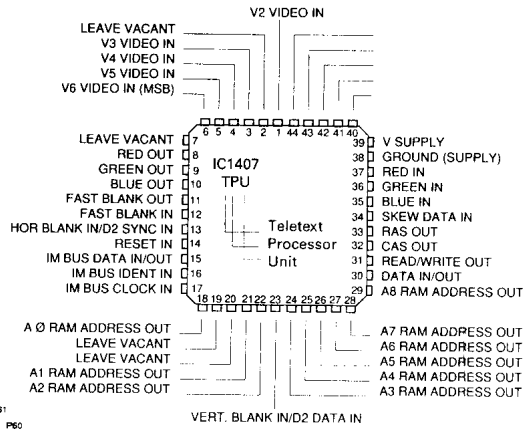
V2 VIDEO IN
LEAVE VACANT
V3 VIDEO IN
V4 VIDEO IN
V5 VIDEO IN
V6 VIDEO IN (MSB)
LEAVE VACANT
RED OUT
GREEN OUT
BLUE OUT
FAST BLANK OUT
FAST BLANK IN
HOR BLANK IN/D2 SYNC IN
RESET IN
IM BUS DATA IN/OUT
IM BUS IDENT IN
IM BUS CLOCK IN
IC1407
TPU
Teletext
Processor
Unit
V SUPPLY
GROUND (SUPPLY)
RED IN
GREEN IN
BLUE IN
SKEW DATA IN
RAS OUT
CAS OUT
READ/WRITE OUT
DATA IN/OUT
A8 RAM ADDRESS OUT
A Ø RAM ADDRESS OUT
LEAVE VACANT
LEAVE VACANT
A1 RAM ADDRESS OUT
A2 RAM ADDRESS OUT
A7 RAM ADDRESS OUT
A6 RAM ADDRESS OUT
A5 RAM ADDRESS OUT
A4 RAM ADDRESS OUT
A3 RAM ADDRESS OUT
VERT. BLANK IN/D2 DATA IN

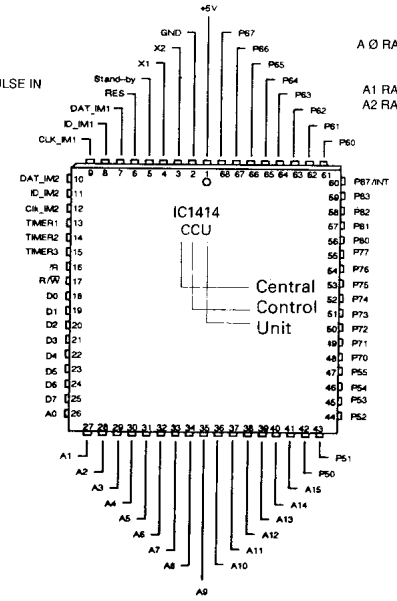
+5V
GND
X2
X1
Stand-by
RES
DAT_IM1
ID_IM1
CLK_IM1
P67
P66
P65
P64
P63
P62
P61
P60
DAT_IM2
ID_IM2
Clk_IM2
TIMER1
TIMER2
TIMER3
R/W
D0
D1
D2
D3
D4
D5
D6
D7
A0
IC1414
CCU
Central
Control
Unit
P87/INT
P83
P82
P81
P80
P77
P76
P75
P74
P73
P72
P71
P70
P55
P54
P53
P52
A1
A2
A3
A4
A5
A6
A7
A8
A9
A10
A11
A12
A13
A14
A15
P51
P50