6.7. INVERTER

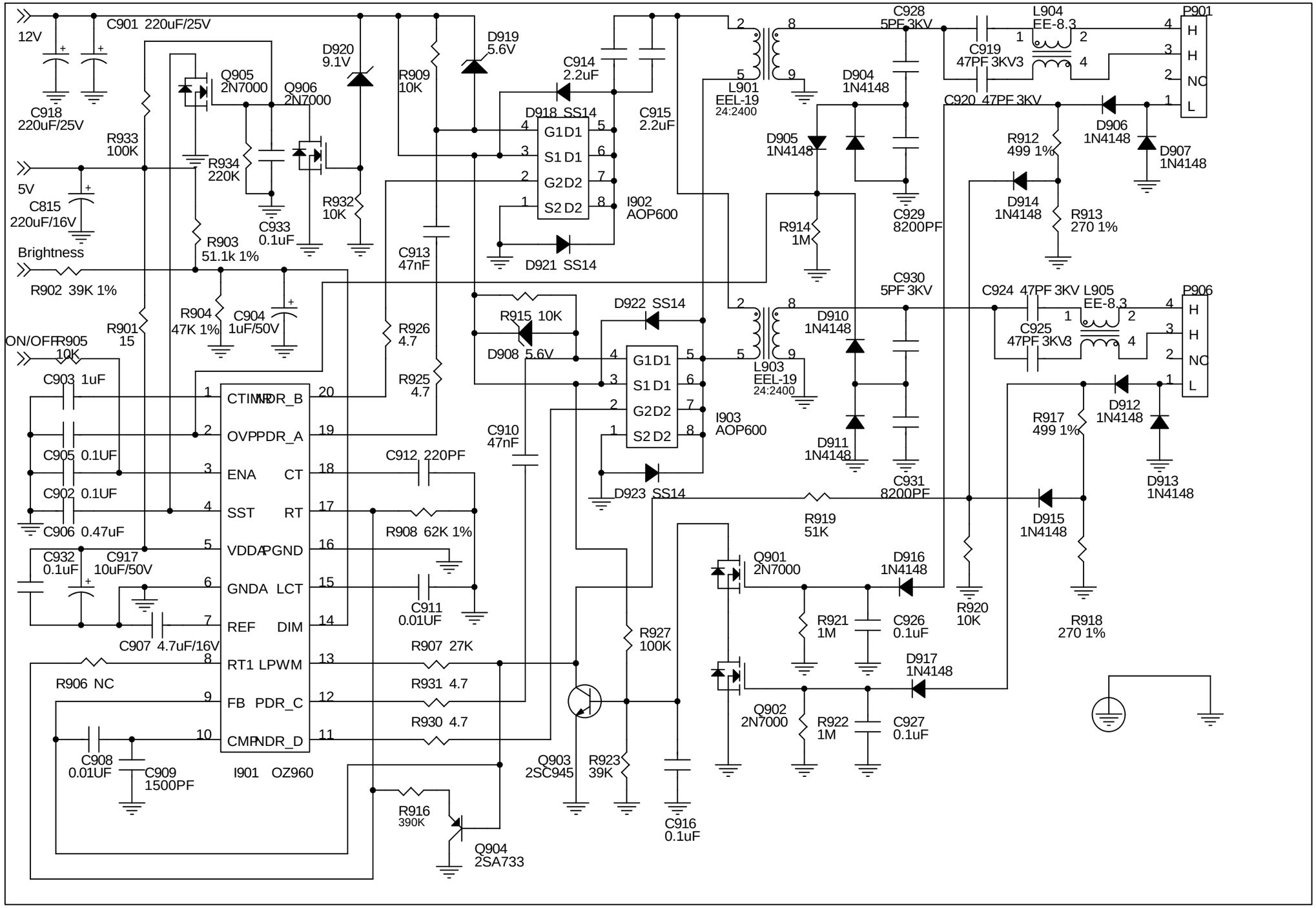
12V
C901 220uF/25V
C918 220uF/25V
Q905 2N7000
Q906 2N7000
D920 9.1V
R909 10K
D919 5.6V
C914 2.2uF
D918 SS14
G1 D1
S1 D1
G2 D2
S2 D2
C915 2.2uF
I902 AOP600
D921 SS14
L901 EEL-19 24:2400
C928 5PF 3KV
L904 EE-8.3
P901
H
H
NC
L
C919 47PF 3KV
C920 47PF 3KV
D904 1N4148
D905 1N4148
D906 1N4148
D907 1N4148
R912 499 1%
D914 1N4148
R913 270 1%
C929 8200PF
R914 1M
R933 100K
R934 220K
R932 10K
C933 0.1uF
5V
C815 220uF/16V
Brightness
R903 51.1k 1%
C913 47nF
R902 39K 1%
R904 47K 1%
C904 1uF/50V
R901 15
ON/OFF
R905 10K
R926 4.7
R925 4.7
R915 10K
D908 5.6V
D922 SS14
C930 5PF 3KV
C924 47PF 3KV
L905 EE-8.3
P906
C925 47PF 3KV
D910 1N4148
L903 EEL-19 24:2400
I903 AOP600
D911 1N4148
D912 1N4148
R917 499 1%
D913 1N4148
C903 1uF
C905 0.1UF
C902 0.1UF
C906 0.47uF
CTIMER
PDR_B
OVP
PDR_A
ENA
CT
SST
RT
VDDA
PGND
GNDA
LCT
REF
DIM
RT1
LPWM
FB
PDR_C
CMP
PDR_D
C910 47nF
C912 220PF
D923 SS14
R919 51K
C931 8200PF
D915 1N4148
R908 62K 1%
C932 0.1uF
C917 10uF/50V
C911 0.01UF
Q901 2N7000
D916 1N4148
R921 1M
C926 0.1uF
R920 10K
R918 270 1%
R927 100K
C907 4.7uF/16V
R907 27K
D917 1N4148
R906 NC
R931 4.7
Q902 2N7000
R922 1M
C927 0.1uF
R930 4.7
C908 0.01UF
C909 1500PF
I901 OZ960
Q903 2SC945
R923 39K
R916 390K
Q904 2SA733
C916 0.1uF