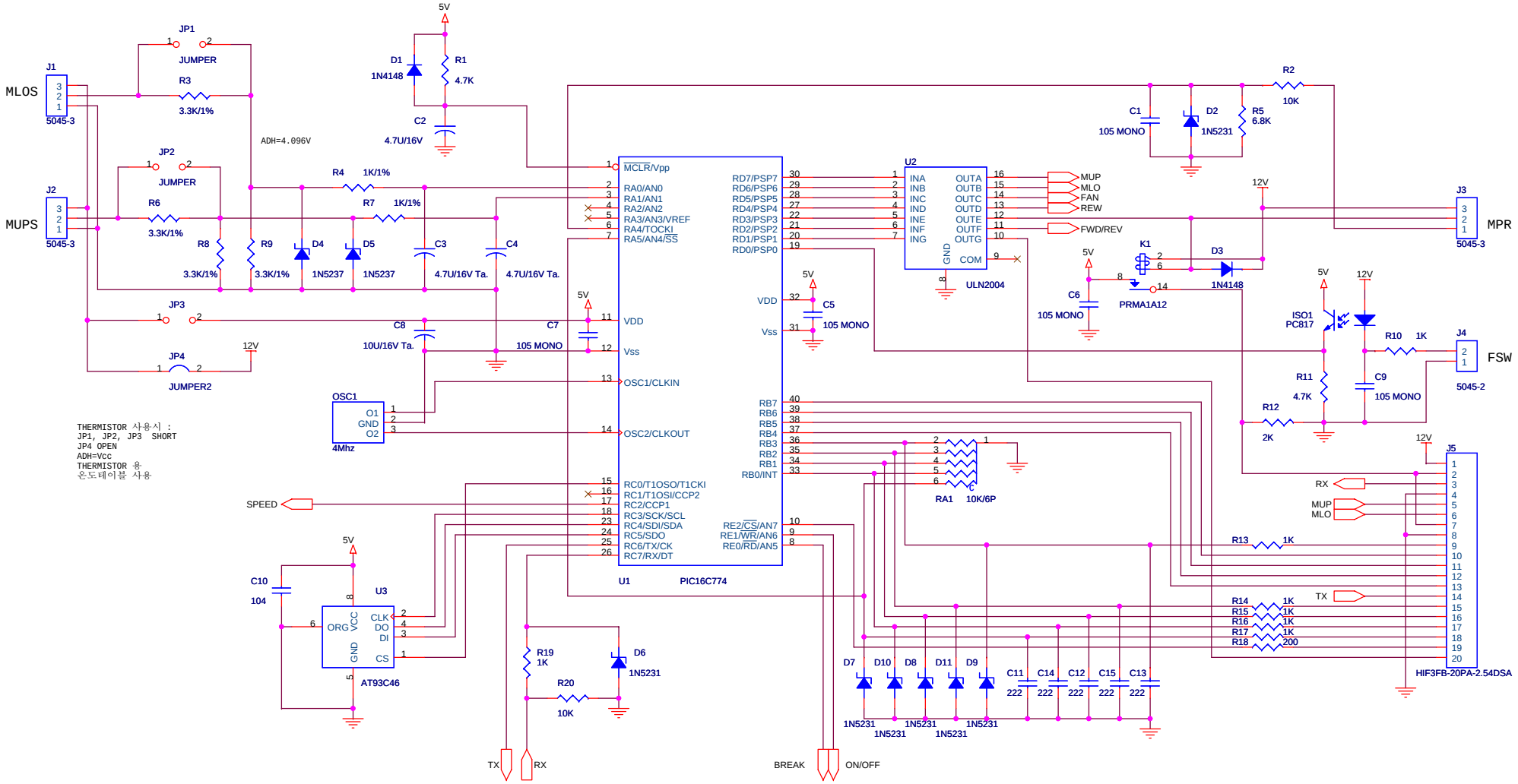

NOTE

JUMPER

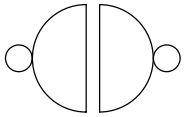

JUMPER2

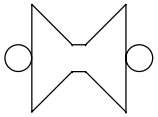

ELECTROLYTIC
(D/S/d/H/T)

4.7U/16V

C2 : 5 / 2 / 0.5 / 11 mm

TANTALUM
(D/S/d/H)

4.7U/16V

C3 : 4.5 / 2.54 / 0.5 / 7.6 mm
C4

10U/16V

C8 : 5.5 / 2.54 / 0.5 / 8.9 mm

CERAMIC
(W/S/d/H/T)

104

C10 : 6.5 / 5.08 / 0.5 / 6.5 / 2 mm

222

C11 : 5 / 2.54 / 0.5 / 6 / 2.5 mm
C12
C13
C14
C15

MONO.
(W/S/d/H/T)

105

C1 : 6 / 5.08 / 0.5 / 5 / 3 mm
C5
C6
C7
C9

Title	AL-1120 MAIN 1/3	
Size A3	Document Number <Doc>	Rev 1.12E
Date: Monday, December 15, 2003	Sheet 1 of 1	