Power supply Circuit Diagram and Component Layout

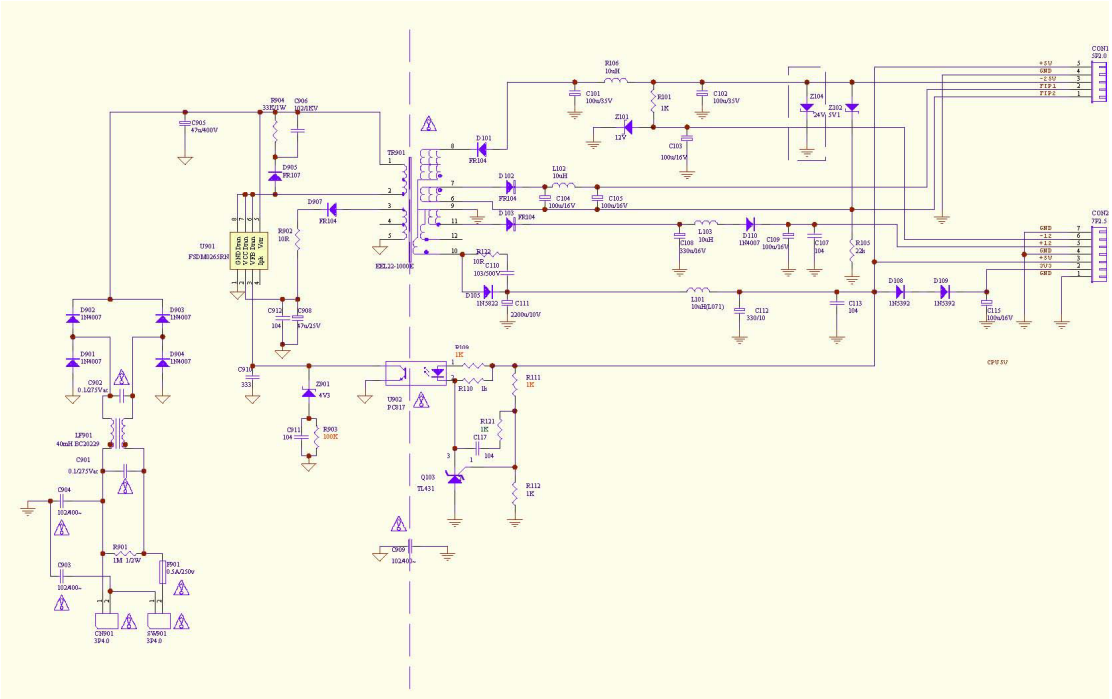

Fig 2-4 Power Supply Circuit Diagram

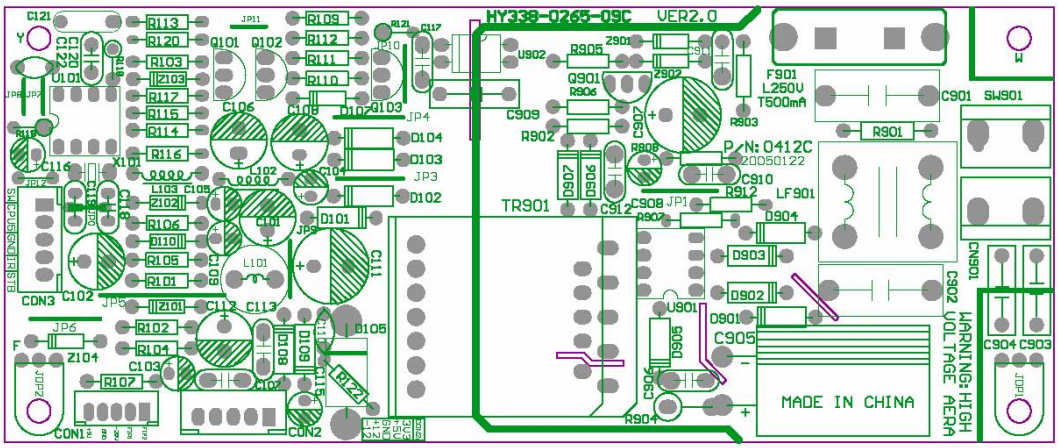

Fig 2-5 Power Supply Assembly Drawing