WILLIAM 7.1

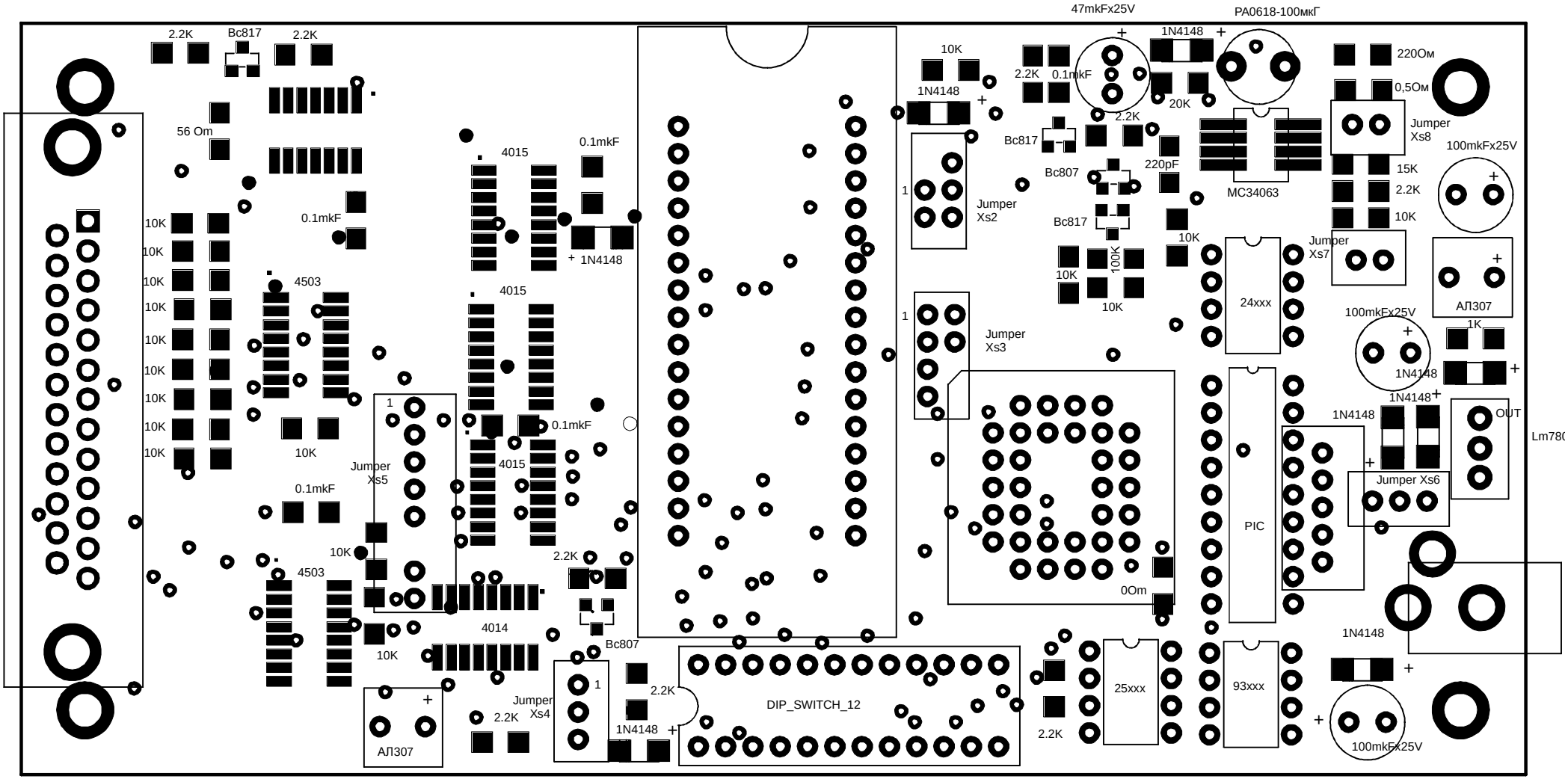

PDF created with pdfFactory Pro trial version www.pdffactory.com

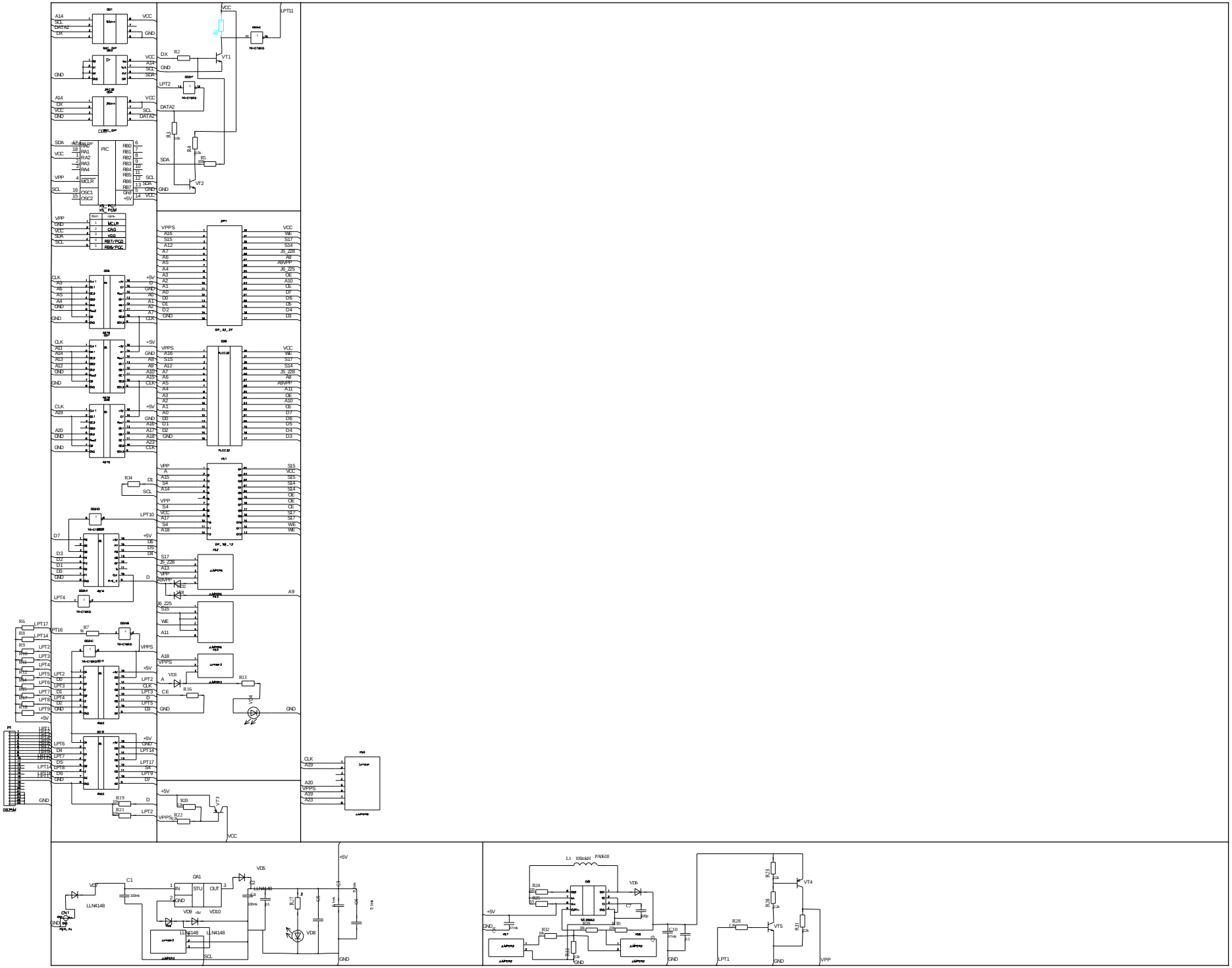

PDF created with pdfFactory Pro trial version www.pdffactory.com