REV #	DATE	REVISION	APPRVD
05	9/28/98	REV/ECO 2794,2789,2829, ADD Q1	PAJ

NOTES:

1) BOARD WILL BE LAID OUT FOR 8 FET's (4 HEAT SINKS) AND 8 GATE RESISTORS. BOARDS WILL BE POPULATED WITH 4 x 10mOHM(325-0019) FET'S AND 8 GATE RESISTORS.

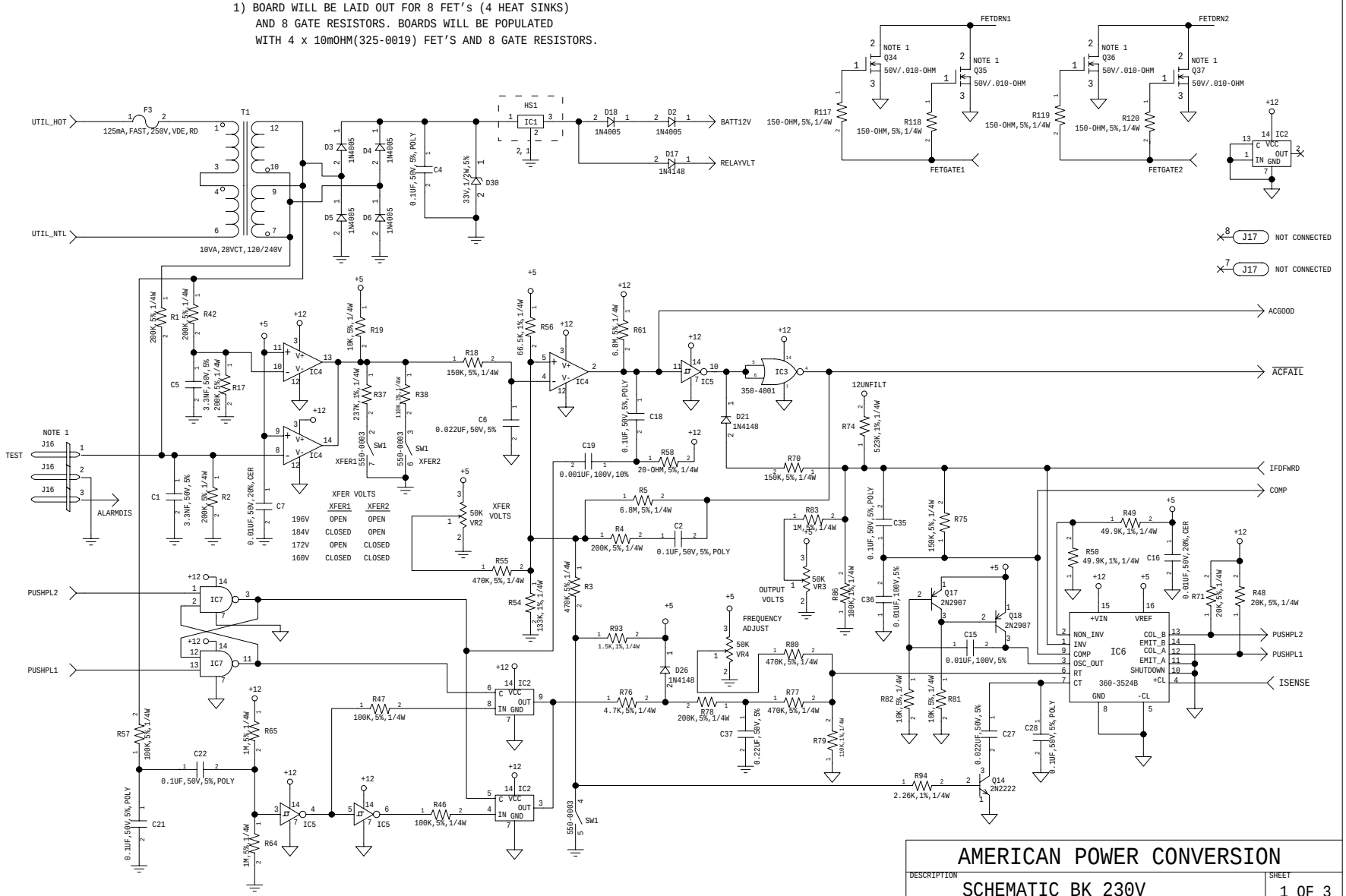

10/30/98

AMERICAN POWER CONVERSION

DESCRIPTION	SHEET
SCHEMATIC BK 230V	1 OF 3
PRODUCT: BK650MI VDE/CE	APCC PART #: 640-0214E

DATE	BY	SCALE	DWG	REV
10/09/97	JFI		E214E-05.SCH	05