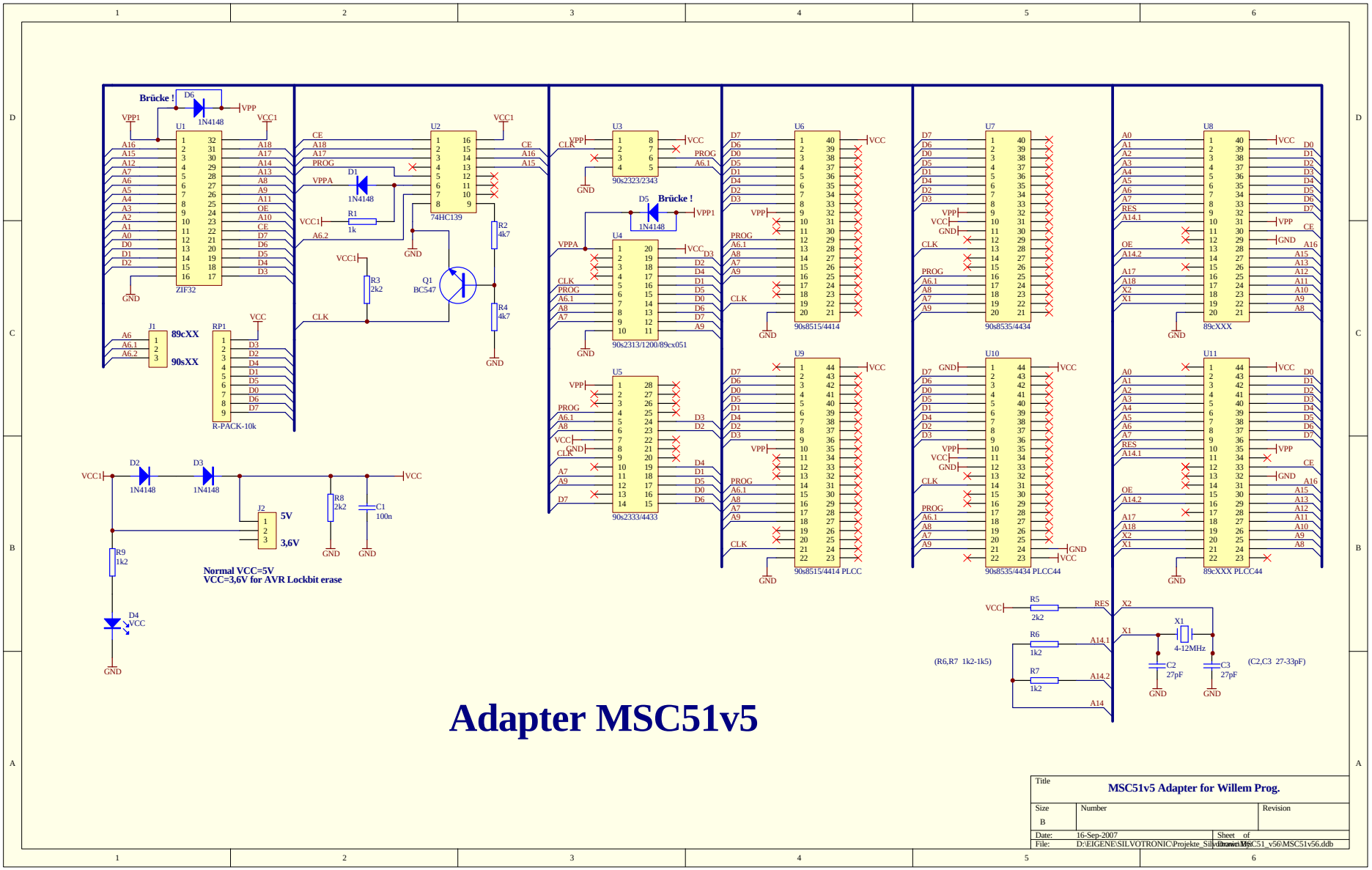
Brücke !
D6
1N4148
VPP
VPP1
VCC1
U1
ZIF32
U2
74HC139
CE
A18
A17
PROG
VPPA
D1
1N4148
R1
1k
A6.2
R2
4k7
R3
2k2
Q1
BC547
R4
4k7
CLK
GND
J1
89cXX
90sXX
RP1
R-PACK-10k
VCC
U3
90s2323/2343
D5
1N4148
U4
90s2313/1200/89cx051
U5
90s2333/4433
U6
90s8515/4414
U7
90s8535/4434
U8
89cXXX
U9
90s8515/4414 PLCC
U10
90s8535/4434 PLCC44
U11
89cXXX PLCC44
D2
1N4148
D3
1N4148
J2
5V
3,6V
R8
2k2
C1
100n
R9
1k2
D4
Normal VCC=5V
VCC=3,6V for AVR Lockbit erase
R5
2k2
R6
1k2
R7
1k2
(R6,R7 1k2-1k5)
X1
4-12MHz
C2
27pF
C3
27pF
(C2,C3 27-33pF)
Adapter MSC51v5
Title
MSC51v5 Adapter for Willem Prog.
Size
B
Number
Revision
Date: 16-Sep-2007
Sheet of
File: D:\EIGENE\SILVOTRONIC\Projekte_Silvotronic\MSC51_v56\MSC51v56.ddb
Drawn by: