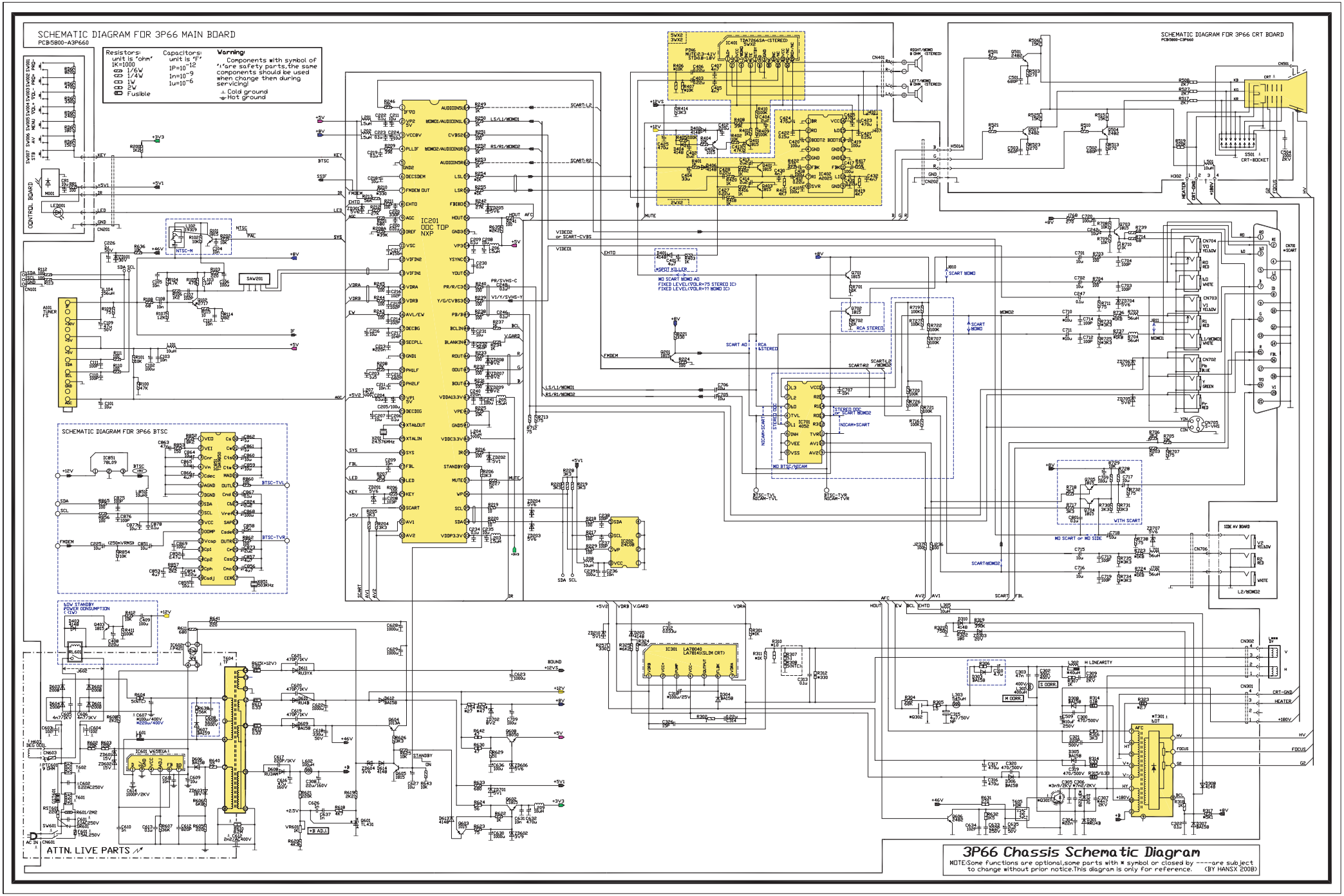Circuit Diagrams