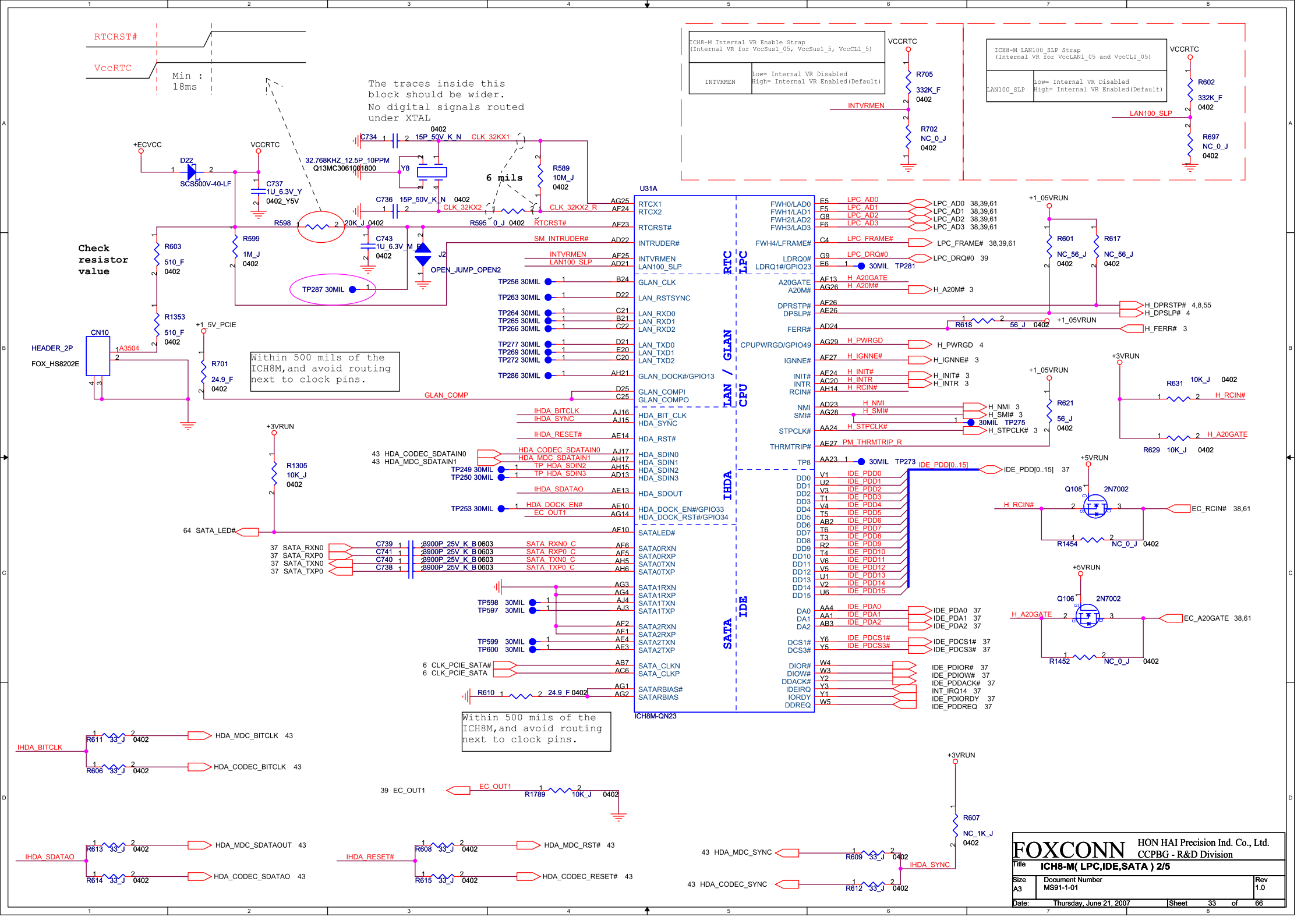
RTCRST#
VccRTC
Min : 18ms
The traces inside this block should be wider.
No digital signals routed under XTAL
ICH8-M Internal VR Enable Strap (Internal VR for VccSus1_05, VccSus1_5, VccCL1_5)
INTVRMEN
Low= Internal VR Disabled
High= Internal VR Enabled(Default)
ICH8-M LAN100_SLP Strap (Internal VR for VccLAN1_05 and VccCL1_05)
LAN100_SLP
Low= Internal VR Disabled
High= Internal VR Enabled(Default)
VCCRTC
R705 332K_F 0402
R702 NC_0_J 0402
R602 332K_F 0402
R697 NC_0_J 0402
+ECVCC
D22 SCS500V-40-LF
C737 1U_6.3V_Y 0402_Y5V
32.768KHZ_12.5P_10PPM Q13MC3061001800
Y8
C734 15P_50V_K_N 0402
C736 15P_50V_K_N 0402
CLK_32KX1
CLK_32KX2
CLK_32KX2_R
6 mils
R589 10M_J 0402
R598 20K_J 0402
R595 0_J 0402
RTCRST#
R599 1M_J 0402
C743 1U_6.3V_M_B 0402
J2 OPEN_JUMP_OPEN2
TP287 30MIL
Check resistor value
R603 510_F 0402
R1353 510_F 0402
CN10 HEADER_2P FOX_HS8202E
A3504
+1_5V_PCIE
R701 24.9_F 0402
Within 500 mils of the ICH8M,and avoid routing next to clock pins.
GLAN_COMP
U31A
ICH8M-QN23
RTC
LPC
GLAN
CPU
IHDA
IDE
SATA
RTCX1
RTCX2
RTCRST#
INTRUDER#
INTVRMEN
LAN100_SLP
GLAN_CLK
LAN_RSTSYNC
LAN_RXD0
LAN_RXD1
LAN_RXD2
LAN_TXD0
LAN_TXD1
LAN_TXD2
GLAN_DOCK#/GPIO13
GLAN_COMPI
GLAN_COMPO
HDA_BIT_CLK
HDA_SYNC
HDA_RST#
HDA_SDIN0
HDA_SDIN1
HDA_SDIN2
HDA_SDIN3
HDA_SDOUT
HDA_DOCK_EN#/GPIO33
HDA_DOCK_RST#/GPIO34
SATALED#
SATA0RXN
SATA0RXP
SATA0TXN
SATA0TXP
SATA1RXN
SATA1RXP
SATA1TXN
SATA1TXP
SATA2RXN
SATA2RXP
SATA2TXN
SATA2TXP
SATA_CLKN
SATA_CLKP
SATARBIAS#
SATARBIAS
FWH0/LAD0
FWH1/LAD1
FWH2/LAD2
FWH3/LAD3
FWH4/LFRAME#
LDRQ0#
LDRQ1#/GPIO23
A20GATE
A20M#
DPRSTP#
DPSLP#
FERR#
CPUPWRGD/GPIO49
IGNNE#
INIT#
INTR
RCIN#
NMI
SMI#
STPCLK#
THRMTRIP#
TP8
DD0
DD1
DD2
DD3
DD4
DD5
DD6
DD7
DD8
DD9
DD10
DD11
DD12
DD13
DD14
DD15
DA0
DA1
DA2
DCS1#
DCS3#
DIOR#
DIOW#
DDACK#
IDEIRQ
IORDY
DDREQ
LPC_AD0
LPC_AD1
LPC_AD2
LPC_AD3
LPC_FRAME#
LPC_DRQ#0
H_A20GATE
H_A20M#
H_DPRSTP#
H_DPSLP#
H_FERR#
H_PWRGD
H_IGNNE#
H_INIT#
H_INTR
H_RCIN#
H_NMI
H_SMI#
H_STPCLK#
PM_THRMTRIP_R
IDE_PDD[0..15]
IDE_PDA0
IDE_PDA1
IDE_PDA2
IDE_PDCS1#
IDE_PDCS3#
+1_05VRUN
R601 NC_56_J 0402
R617 NC_56_J 0402
R618 56_J 0402
R621 56_J 0402
+3VRUN
R631 10K_J 0402
R629 10K_J 0402
+5VRUN
Q108 2N7002
R1454 NC_0_J 0402
Q106 2N7002
R1452 NC_0_J 0402
EC_RCIN# 38,61
EC_A20GATE 38,61
R1305 10K_J 0402
SATA_LED#
SATA_RXN0
SATA_RXP0
SATA_TXN0
SATA_TXP0
C739 3900P_25V_K_B 0603
C741 3900P_25V_K_B 0603
C740 3900P_25V_K_B 0603
C738 3900P_25V_K_B 0603
SATA_RXN0_C
SATA_RXP0_C
SATA_TXN0_C
SATA_TXP0_C
CLK_PCIE_SATA#
CLK_PCIE_SATA
R610 24.9_F 0402
Within 500 mils of the ICH8M,and avoid routing next to clock pins.
IHDA_BITCLK
R611 33_J 0402
R606 33_J 0402
HDA_MDC_BITCLK 43
HDA_CODEC_BITCLK 43
EC_OUT1
R1789 10K_J 0402
IHDA_SDATAO
R613 33_J 0402
R614 33_J 0402
HDA_MDC_SDATAOUT 43
HDA_CODEC_SDATAO 43
IHDA_RESET#
R608 33_J 0402
R615 33_J 0402
HDA_MDC_RST# 43
HDA_CODEC_RESET# 43
R607 NC_1K_J 0402
IHDA_SYNC
R609 33_J 0402
R612 33_J 0402
HDA_MDC_SYNC 43
HDA_CODEC_SYNC 43
FOXCONN
HON HAI Precision Ind. Co., Ltd.
CCPBG - R&D Division
Title ICH8-M(LPC,IDE,SATA) 2/5
Size A3
Document Number MS91-1-01
Rev 1.0
Date: Thursday, June 21, 2007
Sheet 33 of 66

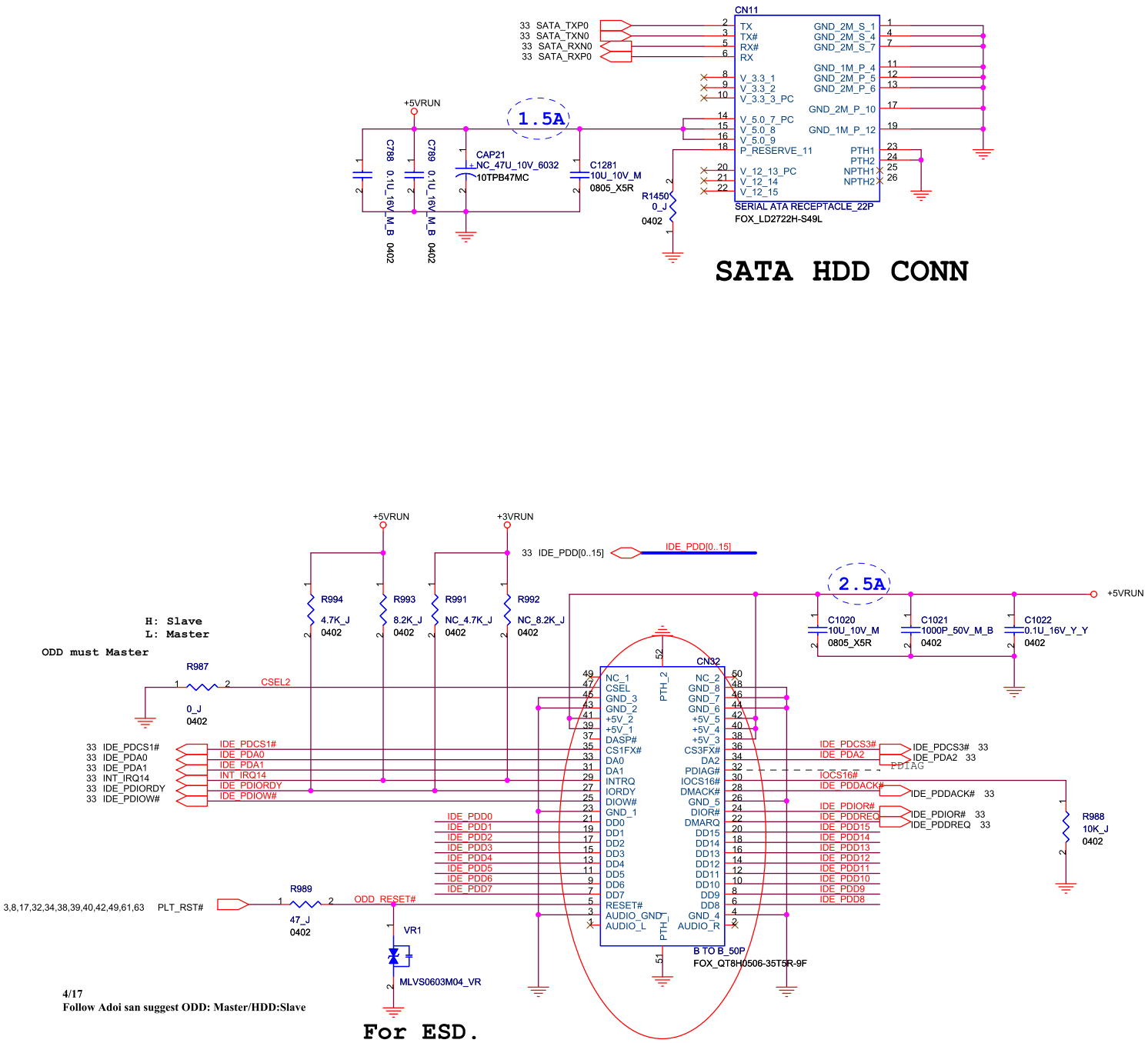

FOXCONN	HON HAI Precision Ind. Co., Ltd. CCPBG - R&D Division	
Title	SATA HDD/CD-ROM	
Size A3	Document Number MS91-1-01	Rev 1.0
Date: Thursday, June 21, 2007	Sheet 37 of 66	