CIRCUIT DIAGRAM(PC04A) MAIN

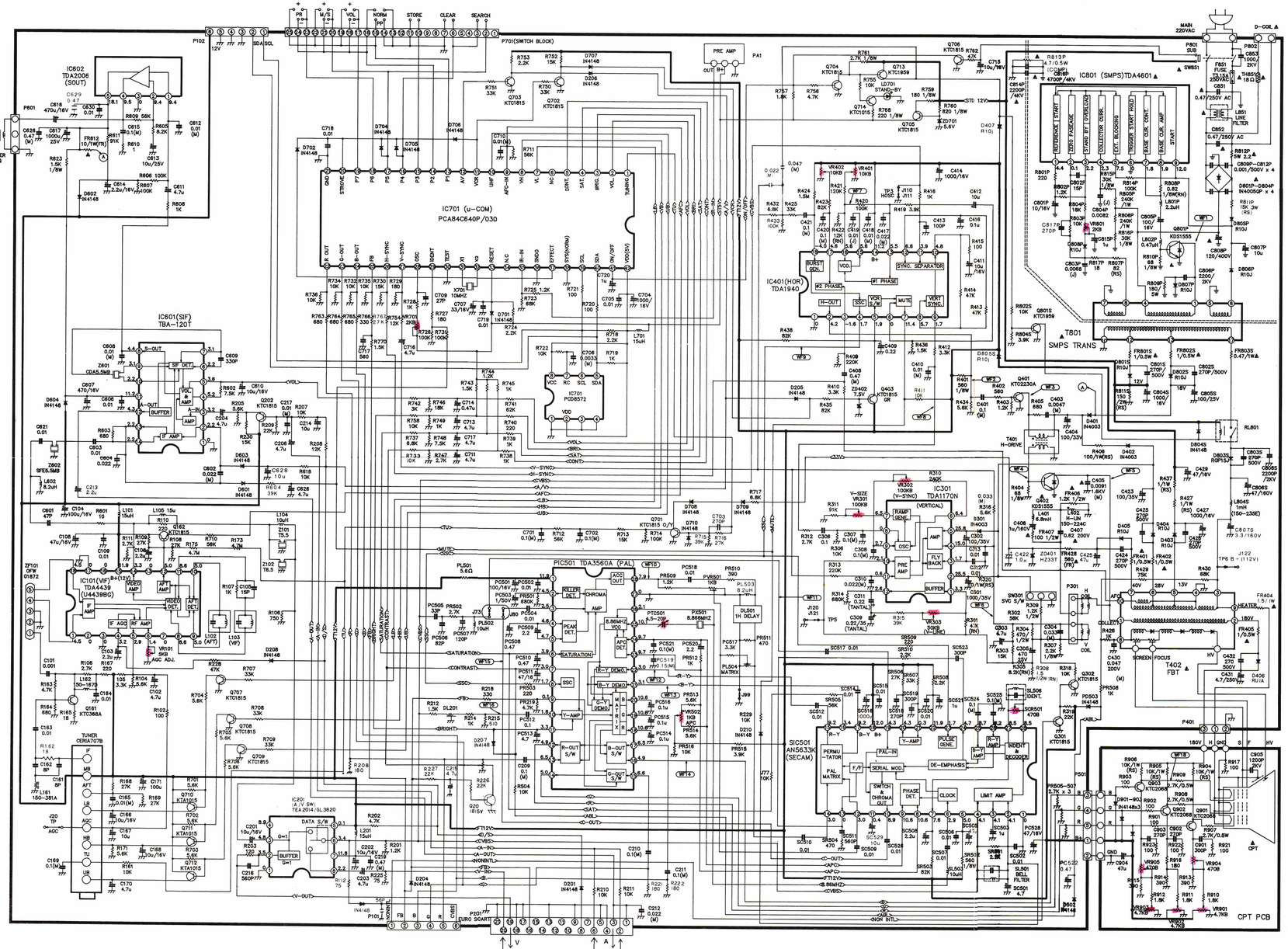

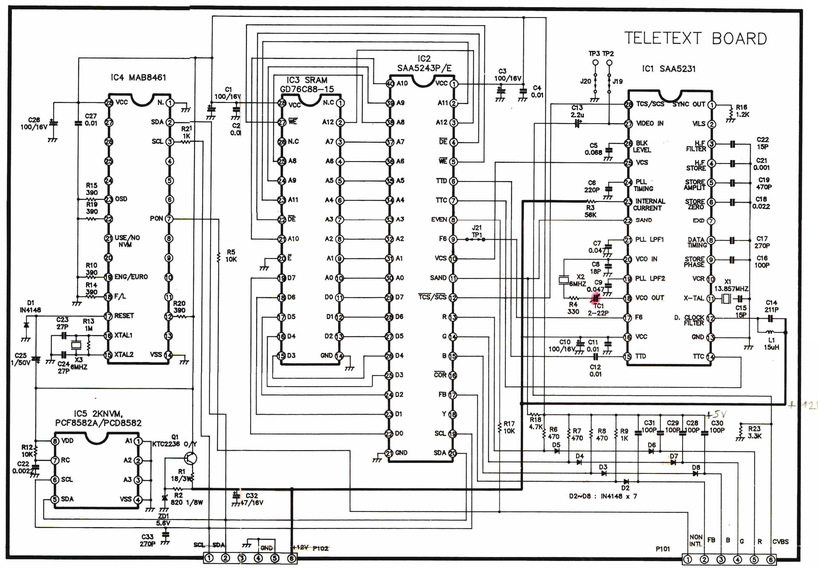

TX CIRCUIT DIAGRAM

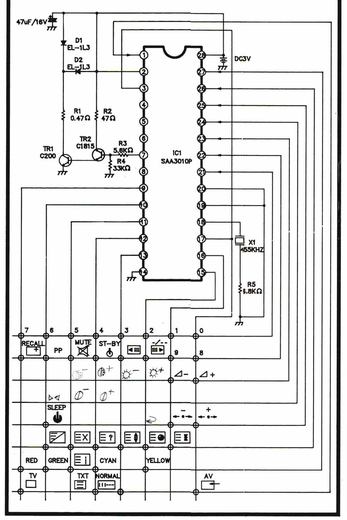

PRE-AMP

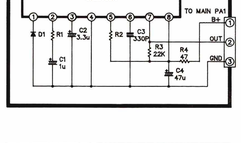

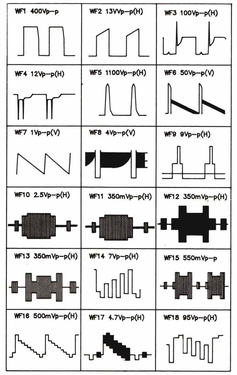

TABLE OF INCH CONVERSION (TABLE 1)

CIRCUIT NO.	INCH 14"	INCH 20"	INCH 21"	REMARK
R302	47KΩ	56KΩ	56KΩ	CARBON FILM RESISTOR
R311	91KΩ	91KΩ	62KΩ	"
R315	27KΩ	39KΩ	39KΩ	"
R427	1Ω 1W	1.2 1W	1Ω 1W	METAL OXIDE FILM RESISTOR
R437	1Ω 1W	1.5Ω 1W	1Ω 1W	"
R429	10KΩ	56KΩ	75KΩ	CARBON FILM RESISTOR
FR404	1.2 Ω	1.5Ω	1.5Ω	FUSIBLE RESISTOR
FR428	390 Ω	1.2K	560Ω	"
C303	3.3uF	4.7uF	4.7uF	AC CAPACITOR
C405	0.0073/1.6KV	0.0091/1.6KV	0.0091/1.6KV	AC CAPACITOR
C407	0.39/200V	0.47/200V	0.47/200V	"
L401	3.3uH	6.8uH	6.8uH	PEAKING COIL
L402	150~224L	150~224L	150~224C	LINEARITY COIL
T402	154~064F	154~177J	154~194B	FBT

NOTICE

Since this is a basic circui diagram.
The value of components and some partical connection are subject to be changed for improvement.

The components marked ▲ conform to VDE or IEC guidelines and are essential for safe operation of the set, while those marked ▲ are required for correct operation. Use specified parts only when replacing.

VALUE OF RESISTOR, CAPACITOR and INDUCTOR

1. Resistances is shown in ohm, k=1,000, M=1,000,000.
2. Unless other wise noted in schematic, all capacitor values less than 1 are expressed in mfd and the values more than 1 in pF.
3. Unless otherwise noted in schematic, all inductor values more than 1 are expressed in uH, and the values less than 1 in H.

OBSERVATION OF VOLTAGES AND WAVEFORMS

1. Voltages read with VTVM from point shown to chassis ground, line voltages 180~270V volts, colour bar signal.
2. Voltages reading may vary ±20%.
3. The schematic shown is representative only.
4. All waveforms are taken using a wide band oscilloscope and a low capacity probe.
5. Check FINE TUNING, AGC, BRIGHTNESS, CONTRAST and COLOUR controls for best picture, make sure that CONTRAST and COLOUR controls are in mid position and BRIGHTNESS controls is almost in maximum position.
6. waveforms are taken using a standard colour bar signal.

P / N : 484—773A